Campus Town Sidewalks Project

TCNJ Advertised Bid # AB140028

PROJECT REQUIREMENTS & SPECIFICATIONS

SCOPE OF WORK

DRAWINGS

April 18, 2014

Please place the following advertisement in the Legal Section of Classified Advertising. Please ensure that the invoice for this advertisement is prepared and an affidavit forwarded to The College of New Jersey, Office of Finance and Business Services, Administrative Services Building, Room 201, P.O. Box 7718, Ewing, NJ 08628-0718.

To be published on **April 18, 2014.** Contact person regarding placement of ad is Roselle Horodeski (609) 771-2495.

THE COLLEGE OF NEW JERSEY
ADVERTISEMENT FOR BIDS
BID #AB140028

Under the provisions of the State College Contracts Law, Chapter 64 of Title 18-A, The College of New Jersey will receive sealed bids for the **Campus Town Sidewalks Project** until **2:00 P.M. on the 19th day of May, 2014** at The College's Office of Finance and Business Services, Administrative Services Building, Second Floor, Room 201, Route 31 (Pennington Road), Ewing Township, New Jersey. At 2:00 P.M. all bids will be publicly opened and read in Room 203 of the Administrative Services Building.

The project will be bid as a Single Lump Sum.

No bidder may submit more than one bid.

Bid Documents may be obtained on/after **April 18, 2014 via our website (www.tcnj.edu/~budfin/).**

A **strongly encouraged pre-bid conference/on-site inspection** is scheduled on **April 25, 2014 at 10:00 A.M**. in Room 203 of the Administrative Services Building, located on The College's Ewing Township, New Jersey campus on Route 31 (Pennington Road).

Bidders are required to comply with the requirements of P.L. 1975 c. 127 (N.J.S.A. 10:5-31 et seq. and N.J.A.C. 17:27 - Affirmative Action); the New Jersey Prevailing Wage Act, N.J.S.A. 34:11-56.25 et seq.; N.J.S.A. 52:25-24.2, "Statement of Stockholders Exceeding 10%"; the Public Works Contractor Registration Act (N.J.S.A. 34:11-56.48 et seq.); the New Jersey Business Registration of Public Contractors provisions (N.J.S.A. 52:32-44); Executive Order 117 and P.L. 2005 Chapter 51 (N.J.S.A. 19:44a-1 et seq.) and all amendments thereto. Failure to do so may result in disqualification of the bid.

A bid bond is required in the amount of 10% of the total bid. Bid bond shall consist of a certified check or cashiers check to the order of The College of New Jersey, or an individual or annual bid bond issued by an insurance company or surety company authorized to do business in the State of New Jersey. The successful Bidder(s) is required to provide a Performance and Payment Bond equal to 100% of the contract. A Surety Disclosure Statement and Certification form must accompany the performance bond.

The College will award the contract to the lowest responsible bidder who satisfies the qualification criteria as set forth in the contract documents.

The College of New Jersey reserves the right to reject any or all bids or to waive any informalities in the bidding in accordance with law. No bid shall be withdrawn for a period of sixty (60) days subsequent to the opening of bids without the consent of The College of New Jersey.

Under N.J.A.C. 17:14-4.2(e), bid advertisements for State construction contracts are required to give notice of the College's small business subcontract goals.

Campus Town Sidewalks

Milestone Schedule

Date: 4/11/14

Advertise for bidding	April 18, 2014
Pre-Bid/Site Visit (10:00 am)	April 25, 2014
Cut off for questions	May 2, 2014
Addendum issued	May 8, 2014
Bids Received	May 19, 2014
Notice of Intent to Award issued	May 23, 2014
End of Protest Period	June 3, 2014
Notice to proceed issued by	June 10, 2014
Submittals completed and approved by	June 23, 2014
Start construction in the field after Special Olympics Nationals	June 23, 2014
Sidewalks and concrete bench work completed by	August 30, 2014
*Landscaping (grass, plants, etc.)	September 15, 2014 -September 19, 2014
Substantial completion	September 19, 2014
Project Closed Out by	November 15, 2014

*Contractor is to provide daily watering as required from the day of planting through November 15, 2014 to assure all plantings become fully established.

Note: Contractor is to schedule with TCNJ at least three weeks in advance for the Metzger road concrete work. Contractor will be required to provide flagmen for the duration of this concrete work. This task cannot take longer than 14 days to complete.

THE COLLEGE OF NEW JERSEY
Construction Bid Proposal Form

Office of Finance & Business Services
Administrative Services Building, Rm. 201
2000 Pennington Road
Ewing, New Jersey 08628-0718

Bid Number: AB140028
Bid Due Date: May 19, 2014

Project Name: Campus Town Sidewalks

BIDDER INFORMATION

Firm Name:

Contact Person:
Address:

Telephone Number:

Fax Number:

Email Address:
Federal I.D. Number:

SOLICITATION OF CONSTRUCTION BIDS

1. **Bid proposals are solicited as follows:**
   - **A. Single Bid (Lump Sum) which combines all trades.**
     - **(1) The total number and types of trades are set forth in the Specifications.**
     - **(2) Bidder enters the Bid Price on the line provided.**
     - **(3) Pursuant to the requirements of N.J.S.A. 18A:64-76, bidder lists the names of the subcontractors on the Subcontractor Information page.**

2. **The scope of work includes new sidewalks near and around Loser Hall to connect the campus in anticipation of the new Campus Town site. The project includes concrete sidewalks, brick pavers, site lighting, grasses and plantings.**

   - **A. See Specifications and Drawings for Details (included in RFP package).**
   - **B. The College may issue Addenda or Clarifications which may include additions to or deletions from the scope of work; changes to the Specifications, Drawings, and proposal form; and clarifications of requirements. Bidder is advised to review all Addenda and/or clarifications carefully, and shall note the receipt of same with their bid package.**

GENERAL INSTRUCTIONS AND REQUIREMENTS

1. PRICES

A. Bidder submits prices for the Base Bid and any Alternate Proposals and Unit Prices which are listed for the contract of the bid. If there is no cost associated with the Alternate or Unit Price, bidder is required to enter "0.00" or "no change".

B. Prevailing wage rates apply (Mercer County).

C. Bid is to remain good for sixty (60) days after the Bid Due Date.

2. BOND REQUIREMENTS AND SURETY STANDARDS

A. Bidder must submit with its bid a Certified Check in the amount of ten percent (10%) of the base bid, or a Bid Bond in the amount of ten percent (10%) of the base bid.

B. The successful bidder must submit a Performance and Payment Bond equal to 100% of the contract. A completed Surety Disclosure Statement and Certification must accompany the Performance and Payment Bond.

(1) The Performance and Payment Bond form and a sample Surety Disclosure Statement and Certification form are included at the end of this Construction Bid Proposal Form.

C. All bid deposits shall be returned within three (3) days of Notice of Intent to Award, except for the successful bidder(s) whose bid security shall be returned after execution of a formal contract, and delivery of the Performance Bond/Labor and Material Bond and Certificates of Insurance.

D. Should the successful bidder fail to enter into said contract after acceptance of bid by the College, then the check or security deposited by that bidder shall, at the option of the College, be retained as liquidated damages, or if Bid Bond has been supplied, principal and surety shall be liable to the amount of the Bid Bond.

E. Attorneys-in-fact who sign bid bonds or contract bonds must file with each bond a certified copy of their Power of Attorney to sign said bonds.

3. LICENSES, CERTIFICATIONS, REGISTRATIONS, QUALIFICATIONS

A. The bidder or, as applicable, its subcontractors shall at the time of bid have those required licenses, certifications, registrations, qualifications and the like ("LCRQ") listed below and shall present satisfactory evidence thereof upon request of the College prior to the notice of intent to award.

(1) The electrical contractor or subcontractor as applicable shall have a valid electrical license. (An electrical license is not required when the work is below 110Volt)

B. The selected bidder/contractor or, as applicable, its subcontractors shall have and shall present satisfactory evidence of all other required LCRQ noted in the Specifications after execution of contract during the submittal process and prior to the start of the applicable work, unless otherwise requested by the College or a date or event specified for that LCRQ in the Specifications.

4. **SUBCONTRACTORS**

   A. Pursuant to New Jersey State Law (N.J.S.A. 18A-76.1), a Single Bid (Lump Sum) bidder discloses its subcontractors to whom the bidder intends to subcontract the work. The Subcontractor Information sheet is provided for this purpose.

5. Under Executive Order 34, the College is responsible for soliciting demographic information from its vendors. The College is required to seek the following information from each firm under contract with the College:

1. Is more than fifty percent (50%) of your company minority owned? (circle one) YES NO (African-American, Hispanic, Asian, and/or Native American)

2. Is more than fifty percent (50%) of your company woman owned? (circle one) YES NO

3. What is the ethnicity of the owner of your company: (check applicable according to 51% ownership)

   ☐ Asian American
   ☐ Multiple Ethnicities
   ☐ Non-Minority
   ☐ Hispanic American
   ☐ African American
   ☐ Caucasian American Female
   ☐ Native American
   ☐ Unspecified

The College is required to solicit the foregoing information. Your response, however, is **strictly voluntary**. Please be advised that any contracting decisions made by the College will **not** be influenced in any way by your decision to provide the above information.

EXECUTIVE ORDER #34: MINORITY AND WOMEN BUSINESS ENTERPRISES

On September 15, 2006, Governor Corzine signed Executive Order 34 establishing a Division of Minority and Women Business Development. The Division is charged with administering and monitoring policies, practices, and programs to ensure that minority and women business enterprises (MWBE) are afforded an equal opportunity to participate in New Jersey's purchasing and procurement processes.

State entities are required to report to the Division the ethnic and gender composition of the vendors with which those state entities do business.

6. Bidder completes Ownership Disclosure form and the Non-Collusion Affidavit form.

~~**7.** Bidders are required to be registered with the New Jersey Department of Property Management and Construction (DPMC) and possess a DPMC C008 classification at the time of bid submission.~~

8. **PREVAILING WAGE AND PUBLIC WORKS CONTRACTOR REGISTRATION ACTS**
    - The work described in this project is subject to the New Jersey Prevailing Wage Act, N.J.S.A. 34:11-56.25 et seq. and the Public Works Contractor Registration Act, N.J.S.A. 34:11-56.48 et seq.
    - The Public Works Contractor Registration Act requires the bidder and any subcontractors listed in the bid to be registered with the New Jersey Department of Labor and Workforce Development at the time the bid is submitted. The contractor must submit registration certificates for all listed subcontractors prior to award of the contract.
    - The Contractor must comply with the New Jersey Prevailing Wage Act, N.J.S.A. 34:11-56.25 through 56.57. Workers employed by the Contractor or any subcontractor or sub-subcontractor in the performance of services directly on the project must be paid prevailing wages. As required by N.J.S.A. 34:11-56.27 and 56.28, this contract cannot become effective until the College obtains from the New Jersey Department of Labor a determination of the prevailing wage rates applicable to the project as of the contract award date and attaches a copy to the contract. As required by N.J.S.A. 34:11-56.27, the Contractor or any subcontractor may be terminated if any covered worker is not paid prevailing wages on the project, and the Contractor and its surety shall be liable for any additional costs which result. The Contractor and its subcontractors must be registered with the New Jersey Department of Labor (N.J.S.A. 34:11-56.51 et seq.), and the prevailing wage rates must be posted at the job site (N.J.S.A. 34:11-56.32). The Contractor and its subcontractors must prepare accurate certified records of wages paid for each worker on the project (N.J.S.A. 34:11-56.29), and copies for the period covered by each invoice must be attached to the invoice submitted under the contract. In accordance with N.J.S.A. 34:11-56.33, the Contractor's final invoice must include a statement of all amounts still then due to workers on the project. The Contractor is also cautioned that it must use job titles and worker classifications consistent with those approved by the Department of Labor, and that, if it intends to pay apprentice rates, it must comply with the Department of Labor's regulations at N.J.A.C. 12:60-7.1 through 7.4.
    - Please refer to http://lwd.dol.state.nj.us/labor/wagehour/wagerate/wage_rates.html for official wage rate determinations for Mercer County, NJ.

9. In order for your proposal to be accepted and deemed valid, your company/firm will be required to comply with the requirements of N.J.S.A. 19:44A-1 et seq/P.L. 2005 Ch. 51 ("Chapter 51") and Executive Order 117. Enclosed are the requirements of Chapter 51 and Executive Order 117, the forms for Certification and Disclosure. The contract that will be generated based on this bid proposal cannot be awarded without approval of the Certification and Disclosure forms by the State of New Jersey, Department of Treasury. **A completed copy of your Certification form is not required at time of bid; however, it will be required from the bidder who receives the notice of intent to award from the College prior to the execution of the contract**.

10. Vendors conducting business with any State agency including The College of New Jersey will be required to be registered with the New Jersey Division of Revenue. The vendor will be required to submit a Business Registration Certificate issued by the Department of Treasury, Division of Revenue, with the State of New Jersey prior to the award of a contract. N.J.S.A. 52:32-44.

11. Energy Star energy efficient products: Under Executive Order #11 (Corzine), the College is required to select ENERGY STAR energy-efficient products when acquiring new energy-using products or replacing existing equipment. For products that do not have ENERGY STAR labels, vendors shall follow guidelines established by the New Jersey Clean Energy Program.

12. QUESTIONS

- **A.** Direct inquiries and correspondence relating to this proposal form and questions regarding the technical specifications and requests for clarification must be submitted in writing via fax to 609-637-5140 or email to horodesk@tcnj.edu and must be received prior to 4:00 p.m. on May 2, 2014.
- **B.** Should any questions be received, an addendum or clarification will be available on or after May 8, 2014 and will be posted to The College's website http://bids.pages.tcnj.edu/.
- **C. If an addendum and/or clarification is posted, it SHOULD be noted in the General Agreement section of the bidders proposal. Failure to do so may subject Bidder to disqualification.**

13. HOW TO SUBMIT THE COMPLETED CONSTRUCTION BID PROPOSAL FORM

- **A.** Bidder places all pages of the completed form and the requisite additional documents in an envelope, seals the envelope, and labels it with his/her firm name, address, and "Sealed Bid Enclosed for (**Bid Number and Project Name**)".

- **B.** Bidder mails or deliver by hand the sealed bid, no later than 2:00 p.m., May 19, 2014, to The College of New Jersey, Attention: Roselle Horodeski for (specify the Bid Number), Office of Finance & Business Services, Room 201, 2000 Pennington Road, Ewing, New Jersey 08628-0718. **At 2:00 p.m., all bids will be publicly opened and read in Room 203 of the Administrative Services Building.**

- **C.** Contractors are advised that the U.S. Postal Service and all express mail companies deliver to The College's Mail Room or Receiving Department, not directly to the Office of Budget & Finance. The College is not responsible for lost or misdirected bids.

14. Any bid not prepared and submitted in accordance with the provisions described herein may be rejected by the College. Any bid received after the time and date specified will

not be considered. No bidder shall withdraw a bid within sixty (60) days after the date of the bid opening to allow the College to determine the lowest bid that will most economically serve the intentions of this Contract.

15. Any bidder who has defaulted on any contract with the College or any other State Agency may be considered as not responsible and their bid may be rejected. THE COLLEGE OF NEW JERSEY reserves the right to exercise this option, as the College deems proper and/or necessary in its best interest.

16. Bids shall include all costs of any nature necessary to complete the project in the manner and within the time required by the contract.

17. The College reserves the right to require bidders to provide a schedule of values of their lump sum bid price upon request.

18. The College is exempt from all taxes including Federal Excise Tax, Transportation Taxes, State Excise, Sales Tax and local taxes. Rentals of equipment for 28 days or less is not exempt from any tax under the State sales tax act.

19. Before submitting his bid, the bidder shall be familiar with the Drawings, Specifications, and other Documents that will form part of the contract and shall have visited the site of the project to confirm for themselves the character and amount of work involved.

20. No bidder shall be allowed to offer more than one price on each item even though he/she may feel that he/she has two or more types or styles that will meet specifications. Bidders must determine for themselves which to offer. This may be cause for automatic rejection of bid.

21. It is understood and agreed that all prices quoted are firm and not subject to any increase during the life of the contract.

22. Should any difference arise between the contracting parties as to the meaning or intent of these instructions or specifications, the College's decision shall be final and conclusive.

23. Should the bidder discover discrepancies in this Request for Bids, the matter shall be at once brought to the attention of the College, and the discrepancies corrected by written agreement before submission of bid. The correction will be issued by addendum.

24. ACCEPTANCE/REJECTION OF BIDS

A. THE COLLEGE OF NEW JERSEY reserves the right to accept or reject any or all items covered in the bid request, or any portion(s) thereof, re-advertise and/or take such other steps decreed necessary and in the best interest of the College in accordance with law. Where two or more bidders are tied and all other relevant

factors being equal, the College reserves the right to make the award to one of the bidders.

B. The bid is irrevocable by the bidder or the bidder's representatives. The bid, and any award made to the bidder by the College, shall bind the bidder and the bidder's heirs, executors, administrators, successors or assigns.

C. Award of contract shall be made to the lowest responsible bidder, whose bid, conforming to the invitation for bids, is the most advantageous to the College.

D. The award of the contract or the rejection of the bids shall be made within sixty (60) days of the date of receiving bids, unless written extensions are requested by the College and accepted by the bidder(s). All bid securities shall be returned immediately if all bids are rejected. The successful bidder(s) to whom the award is to be made will be notified by receipt of a written "Intent to Award" from the College.

E. When award of contract is made in one fiscal year with effective date in the next fiscal year, award shall be contingent upon the availability and appropriation of sufficient funds for that purpose for the year in which said contract takes effect. When a contract shall be awarded for a period in excess of one year, said contract shall be contingent upon the annual availability and appropriation of sufficient funds for that purpose for each year of the contract term.

25. WITHDRAWAL OF BIDS

A. A written request for the withdrawal of a bid, or any part thereof, will be granted if the request is received by the College prior to the specified time of the bid opening.

B. Should the bidder refuse to perform the work for the price provided, they will forfeit their bid security and will be held liable for the difference between their low bid and the next highest/responsive bidder.

26. OSHA COMPLIANCE:

A. The Contractor shall guarantee that all materials, supplies and equipment to be provided under his contract shall meet all applicable requirements, Specifications and standards of the Federal Occupational Safety and Health Act (OSHA) of 1970 as amended to date of acceptance by the College, and shall also apply to Contractors Construction procedures.

27. APPLICABLE LAWS:

A. The following list of statutes and regulations, which may be applicable in whole or in part, is provided for the benefit of the Contractor and is not meant to be all-inclusive. In the event that other laws are applicable, it shall be the responsibility and obligation of the Contractor to ascertain and comply with them.

(1) <u>New Jersey Statutes and Regulations</u>

N.J.S.A. 10:5-31 *et seq.* and N.J.A.C. 17:27-1 *et seq.*, Affirmative Action

Prevailing Wage Act, N.J.S.A. 34:11-56.25 *et seq.*

N.J.S.A. 52:32-44, Business Registration Certificate

N.J.S.A. 34:11-56.48 *et seq.*, Public Works Contractor Registration Act

(2) Federal Statutes

Immigration Control and Reform Act (1986) – 8 U.S.C.A. Section 1324(a) *et seq.*
Civil Rights Act of 1964 – 42 U.S.C.A. Section 1971 *et seq.*
The Americans with Disabilities Act of 1990

28. EXAMINATION OF SITE, DRAWINGS AND SPECIFICATIONS

A. Each Bidder shall visit the site of the proposed work and fully acquaint themselves with the conditions as they exist so that they may fully understand the facilities, difficulties, and restrictions attending the execution of the work under this Contract.

B. Bidders shall also thoroughly examine and be familiar with the Drawings and Specifications. The failure to receive or examine any form, instrument or document, or to visit the site and acquaint himself with conditions there existing shall in no way relieve any bidder from obligation with respect to his bid. By submitting a bid, the bidder agrees and warrants that he has examined the site, the Drawings and Specifications and, that the Specifications and Drawings are adequate and the required result can be produced under the Drawings and Specifications. No claim for any extra will be allowed because of alleged impossibilities in the productions of the results specified or because of unintentional errors or conflicts in the Drawings and Specifications. No change orders will be issued for items, materials or issues that existed on or with respect to the site prior to bidding.

29. DRAWINGS AND SPECIFICATIONS

A. The project shall be performed in accordance with the requirements of the Drawings and Specifications, subject to modification as provided in General Conditions. The Drawings and Specifications are intended to complement and supplement each other.

B. Any work required by either of them and not by the other shall be performed as if denoted in both. Should any work be required which is not also denoted in the Specifications or on the Drawings because of an obvious omission, but which is, nevertheless, necessary for the proper performance of the project, such work shall be performed as fully as if it were described and delineated.

30. FORM OF AGREEMENT

A. Every successful bidder shall be required to sign the standard form contract, a copy of which is attached. Any proposed language or form changes which in any way modifies the contractor's responsibilities as set forth in the Contract Documents will not be acceptable and will be deemed to constitute a bid exception.

31. MULTIPLE BIDS NOT ALLOWED:

A. No bidder is allowed to submit more than one bid from an individual, firm, partnership, corporation or association under the same or different name. This will be cause for automatic rejection of each bid.

32. SUBSTITUTIONS:

A. The bidder may include in their bid substitute materials or equipment or methods in lieu of those specified in the contract documents, but they do so at their own risk. Any substitution must be equivalent in type, function and quality to the item required in the contract.

33. DOCUMENTS/SUBMISSIONS THAT MUST BE PROVIDED BEFORE CONTRACT AWARD:

- AFFIRMATIVE ACTION: The bidder is required to complete and submit a copy of Initial Project Workforce Report (AA-201) to the College and the Division of Public Contracts Equal Employment Opportunity Compliance verifying that the bidder is operating under a federally approved or sanctioned Affirmative Action program. The bidder also agrees to submit a copy of the Monthly Project Workforce Report once a month thereafter for the duration of this contract to The College and the Division.

- CERTIFICATE OF INSURANCE: The bidder is required to submit proof of liability insurance in accordance with The College's contract.

- P.L. 2005, Chapter 51 / Executive Order 117 - Contractor Certification and Disclosure of Political Contributions:

  In order for your proposal to be accepted and deemed valid, your company/firm will be required to comply with the requirements of Chapter 51 and Executive Order 117. Enclosed are the requirements of Ch. 51 and EO 117, the forms for Certification and Disclosure. The contract that will be generated based on this bid cannot be awarded without approval of the Certification and Disclosure forms by the State of New Jersey, Department of Treasury.

- New Jersey Business Registration Certificate

- All applicable licenses, certificates, and requirements specified in the scope of work, contract documents and specifications.

The following Bidder's Checklist **is provided as an aid to the bidder. It does not in any way relieve the bidder of its responsibility to insure that its bid proposal is complete.**

a. _____ Bidder has completed the Bidder Information section and General Agreement section and filled out the receipt of addendum and clarifications.

b. _____ Bidder has completed the form of proposal and indicated base bid for either Separate Bid or Single Bid (Lump Sum all trades), prices for Alternate Proposals, and Unit Prices.

c. _____ Bidder for Single Bid (Lump Sum) has listed and has disclosed the subcontractors on the Subcontractor Information form.

d. _____ Bidder has enclosed a certified check or bid bond for ten percent (10%) of the amount of the bid.

e. _____ Bidder has completed and enclosed the Non-Collusion Affidavit.

f. _____ Bidder has completed and enclosed the Ownership Disclosure form.

g. _____ Bidder and each disclosed subcontractor has enclosed a copy of its **registration certificate** in accordance with the requirement of the Public Works Contractor Registration Act. (NJ Dept. of Labor and Workforce Development)

h. _____ Bidder has enclosed a copy of its **Chapter 51 & EO117 Certification form. A completed copy of your Certification form is not required at time of bid; however, will be required from the bidder who receives the intent to award from the College**.

i. _____ Bidder has enclosed a copy of its **New Jersey Business Registration Certificate** in accordance with the requirements of the New Jersey Division of Revenue. **A completed copy of your Certificate is not required at time of bid; however, will be required from the bidder who receives the intent to award from the College.**

j. _____ Bidder has acknowledged the **Affirmative Action Language** in accordance with the requirements P.L. 1975 C.127. (NJAC 17:27).

k. _____Bidder has enclosed its MWBE information.

l. _____Bidder has enclosed its Electrical License and any other licenses, certifications, certifications, and qualifications.

m. _____Bidder has enclosed its Vendor Qualification Statement

n. _____ ~~Bidder has included a copy of its latest Experience Modification Rating (EMR Safety Rating). The College requires an average rating over the last 5 years of 1.25 or less.~~

~~o.~~ _____ ~~Bidder has included a copy of its DPMC Notice of Classification and Total Amount of Uncompleted Contracts.~~

GENERAL AGREEMENT

1. Having examined the plans and specifications with related documents and the site of the proposed work and being familiar with all of the conditions surrounding the construction of the proposed project including the availability of materials and labor, the undersigned hereby proposes to furnish all labor, materials, and supplies, and to construct the project in accordance with the Contract Documents, within the time set forth therein, and at the price stated. This price covers all expenses incurred in performing the work required under the Contract Documents, of which this proposal is a part.

2. Bidder acknowledges receipt of the following Addendums/Clarifications:

Addendum Number _____ Date _____Addendum Number ____ Date_____
Addendum Number _____ Date _____Addendum Number ____ Date_____
Addendum Number _____ Date _____Addendum Number ____ Date_____

3. Bidder acknowledges and affirms that he/she has personal knowledge of or has obtained and reviewed a copy of the valid prevailing wage rates at the time of the bid and for the duration of the contract for all trades involved in the project for the geographical location of the project as issued by the Commissioner of the Department of Labor & Workforce Development, Trenton, NJ 08625 (609) 292-2259 or visiting the Department of Labor website at (http//lwd.dol.state.nj.us/labor/wagehour/wagerate/wage_rates.html).

4. Bidder agrees that its price is good and the bid shall not be withdrawn for a period of 60 calendar days after the scheduled Bid Due Date and Time.

5. Upon conclusion of the 10 business day protest period, Bidder will execute the formal contract within 5 business days and deliver as required in the General Conditions: a Performance and Payment Bond; Surety Disclosure and Certification Statement; and certificates of insurance for general liability, automobile and worker's compensation.

6. Bidder acknowledges work to commence on site not later than ten (10) calendar days after receipt of a Notice to Proceed.

Respectfully submitted,

(Seal if bid is by Corporation)

_____
(Signature of Principal)

_____
(Printed Name of Principal)

_____
(Title of Principal)

PRICES FOR SINGLE BID (LUMP SUM): Base Bid, Alternate Proposals, and Unit Prices
FORM OF PROPOSAL

To: **The College of New Jersey**

for: Campus Town Sidewalks

Date _____

A. BID:

1.**Base:** We, _____, the Undersigned, in accordance with the published advertisement inviting proposals, will furnish all labor, material, equipment and services necessary for the complete construction, as defined in the advertisement, specimen contract, specifications, addendums/clarifications/bulletins, drawings, and proposal, for the Contract amount indicated below for the **above noted project** in strict accordance with the Contract Documents and Addenda thereto for the total sum of:

_____Dollars $_____
(words)

General Construction (Single overall Prime Contract)

2. **Add /Deduct Alternate**
Check One: _____Add _____Deduct

No Alternates are requested for this bid.

3. CHECK LIST FOR BIDDERS:
A check list has been provided in these specifications for the use in completing this proposal. Bidders are encouraged to reference said list to minimize the opportunity for errors by the bidder.

B. UNIT PRICES: We, the Undersigned, agree, if awarded the Contract to perform additional work or delete work at the Unit Prices set forth below or at a negotiated unit price (Unit Prices are for work that is in addition to or is deleted from the base bid work):

No Unit Prices are requested for this bid.

C. AGREEMENT: We, the Undersigned, agree, if awarded the Contract, to execute an agreement for the above stated work and compensation on the Standard Form of Agreement Between Owner and Contractor.

D. SURETY: We, the Undersigned, agree, if awarded the Contract, to execute and deliver to the Owner, prior to the signing of the Contract, the Performance and Payment Bonds as required.
- Contractor shall provide a Maintenance Bond at job completion for a period of one year for 100% of the final contract price.

E. BID SECURITY: The attached bid security is to become the Property of the Owner in the event that the Contract and bond are not executed within the time set forth, as liquidated damages for the delay and

additional expense (including the difference between the price provided with said bond and the next lowest responsive bidder) to the Owner caused thereby.

Certified Check $_____
Bid Bond $_____

F. STATEMENT:

1. We, the Undersigned, acting through its authorized officers and intending to be legally bound, agree that this bid proposal shall constitute an offer by the Undersigned to enter into a Contract with the acts and things therein provided, which offer shall be irrevocable for sixty (60) calendar days from the date of opening hereof and that the Owner may accept this offer at any time during said period by notifying the Undersigned of the acceptance of said offer.

2. We, the Undersigned, acknowledge receipt of the following Addenda/Clarifications:

Addenda Number	Dated
_____	_____
_____	_____
_____	_____

The undersigned further agrees to comply with the requirements as to conditions of employment, wage rates, and hours of labor set forth in the Contract Documents.

Dated _____

Firm Name _____ Phone Number:_____

Address _____

_____

**If a corporation, give the State of Incorporation, using the phrase:
"A corporation organized under the laws of _____."
If a partnership, give names of the partners, using also the phrase:
"Co-partners trading and doing business under the firm name and style of
_____.
If an individual using a trade name, give individual name, also using the phrase:
"An individual doing business under the firm name and style of _____.

Dated: _____

STATE OF _____
SS.
COUNTY OF _____

_____ being duly sworn say that the several matters stated in this proposal are in all respects true, and that no member of the State or employee of the College are interested in any way in this proposal.

Sworn and subscribed before me _____
Bidder signs above line

this _____ day of_____ 20____

_____ _____
Print Name and Title

SUBCONTRACTOR INFORMATION FOR SINGLE BID (LUMP SUM)

Pursuant to the State Colleges Contract Law, N.J.S.A. 18A:64-76.1, all bids submitted shall set forth the names and license numbers of all subcontractors to whom the bidder intends to subcontract the plumbing and gas fitting work; the refrigeration, the heating and ventilating systems and equipment; the electrical work, including any electrical power plants; tele-data, fire alarm, or security systems; the structural steel and ornamental iron work (individually, the "Trade" or collectively, the "Trades").

For each Trade listed below for which the work will be completed by a subcontractor you must list for each such subcontractor at a minimum the name and, where applicable, license number (or in lieu thereof enclose a copy of the license with this form) and preferably you will also list the subcontractor's address, telephone number, and fax number. If the work will be self-performed by the bidder, you may indicate that by inserting the name of the bidder (next to "Name"). If work by that Trade is not required per the scope of work of the project, you may indicate that by inserting "Not required" (next to "Name"). If the name of a subcontractor is not provided on this form for any one or more of the Trades, the bidder, in submitting its bid, certifies that, for such Trades, either the work will be self-performed by the bidder, or the work is not required per the scope of work.

Failure to complete this form as required may result in your bid being disqualified.

Plumbing and Gas Fitting Work

List information for Subcontractor, if any:

Name: _____

License Number: _____

Address: _____

_____

Telephone: _____

Fax: _____

Refrigeration, Heating and Ventilating Systems and Equipment

List information for Subcontractor, if any:

Name: _____

License Number: _____

Address: _____

_____

Telephone: _____

Fax: _____

Electrical Work, including any Electrical Power Plants, Tele-data, Fire Alarm, or Security Systems

List information for Subcontractor, if any:

Name: _____

License Number: _____

Address: _____

_____

Telephone: _____

Fax: _____

Structural Steel Work and Ornamental Iron Work

List information for Subcontractor, if any:

Name: _____

License Number: _____

Address: _____

_____

Telephone: _____

Fax: _____

_____
Bidder Name

By: _____
Signature

_____
Printed Name of Signing Individual

_____
Date

SMALL BUSINESS, MINORITY AND/OR FEMALE-OWNED BUSINESS REPORTING

1. Contractor and sub-contractors are requested to check all of the following that apply to their company and, if applicable, submit a copy of their certificate(s):

A. My company is certified by the NJ Department of Treasury, Division of Revenue as a:

_____ small business_____ minority-owned business _____female-owned business

B. My company is certified by the NJ Department of Transportation as a:

_____ small business_____ minority-owned business _____female-owned business

C. My company is a _____small business_____ minority-owned or _____ female-owned but is not certified by either NJ Department.

C. _____ My company is not a small business, minority-owned or female-owned.

_____

Signed

_____

Date

PERFORMANCE BOND & PAYMENT BOND

BOND NO._____

KNOW ALL MEN BY THESE PRESENTS, that we, the undersigned _____ _____as Principal, and_____, a corporation of the State of _____, duly authorized to do business in the State of New Jersey, having an office at _____, are hereby held and firmly bound unto The College of New Jersey in the Penal Sum of _____ DOLLARS, for payment of which well and truly to be made, we hereby jointly and severally bind ourselves, our heirs, executors, administrators, successors and assigns.

SIGNED this _____ day of _____, 20_____

THE CONDITION OF THE ABOVE OBLIGATION IS SUCH THAT, WHEREAS, the above named Principal did on the _____ day of _____, 20_____, enter into a written contract with The College of New Jersey for _____ which said contract is made a part of this bond as set forth herein;

NOW, if the said _____ shall well and faithfully do and perform the things agreed by _____ to be done and performed according to the terms of the said contract; shall pay all lawful claims of sub-contractors, materialmen, laborers, persons, forms of other suppliers or teams. fuel, oils, implements or machinery furnished, used or consumed in the carrying forward, performing, or completing of said contract, we agreeing and assenting that this undertaking shall be for the benefit of any subcontractor, materialman, laborer, person, firm or corporation having a just claim, as well as for the obligee herein; then this obligation shall be void, otherwise the same shall remain in full force and effect; it being expressly understood and agreed that the liability of the surety for any and all claims hereunder shall in no event exceed the penal amount of this obligation as herein stated.

The said surety hereby stipulated and agrees that no modifications, omissions, or additions in or to the terms of the said contract, or in or to the plans and specifications therefore shall in any wise effect the obligation of said surety on its bond.

This bond is given in compliance with the requirements of the statutes of the State of New Jersey including N.J.S.A. 18A:64-68 and any amendments thereof.

SIGNED, SEALED AND DELIVERED
IN THE PRESENCE OF

_____ BY:_____
Witness

_____ BY:_____
Witness as to Surety ATTORNEY-IN-FACT

Countersigned

this _____ day of _____, 20_____

BY:_____

NOTE: General Power of Attorney and the current financial statement of the bonding company must be attached to each copy (a total of three) of the Performance Bond.

SURETY DISCLOSURE STATEMENT AND CERTIFICATION

_____, surety(ies) on the attached bond, hereby certifies(y) the following:

(1) The surety meets the applicable capital and surplus requirements of R.S. 17:17-6 or R.S. 17:17-7 as of the surety's most current annual filing with the New Jersey Department of Insurance.

(2) The capital (where applicable) and surplus, as determined in accordance with the applicable laws of the State of New Jersey, of the surety(ies) participating in the issuance of the attached bond is (are) in the following amount(s) as of the calendar year ending December 31, ____, (insert most recent calendar year for which capital and surplus amounts are available), which amounts have been certified as indicated by certified public accountants (indicating separately for each surety that surety's capital and surplus amounts, together with the name and address of the firm of certified public accountants that shall have certified those amounts):

_____

_____

_____

(3) (a) With respect to each surety participating in the issuance of the attached bond that has received from the United States Secretary of the Treasury a certificate of authority pursuant to 31 U.S.C. 9305, the underwriting limitation established therein and the date as of which that limitation was effective is as follows (indicating for each surety that surety's underwriting limitation and the effective date thereof):

_____

_____

_____

(b) With respect to each surety participating in the issuance of the attached bond that has not received such a certificate of authority from the United States Secretary of the Treasury, the underwriting limitation of that surety as established pursuant to R.S. 17:18-9 as of date on which such limitation was so established, is as follows (indicating for each such surety that surety's underwriting limitation and the date on which that limitation was established:

_____

_____

_____

(4) The amount of the bond to which this statement and certification is attached is $_____.

(5) If, by virtue of one or more contracts of reinsurance, the amount of the bond indicated under item (4) above exceeds the total underwriting limitation of all sureties on the bond as set forth in items (3) (a) or (3) (b) above, or both, then for each such contract of reinsurance:

(a) The name and address of each such re-insurer under that contract and the amount of that re-insurer's participation in the contract is as follows:

_____

_____

_____

_____

(b) Each surety that is party to any such contract of reinsurance certifies that each reinsurer listed under item (5) (a) satisfies the credit for reinsurance requirement established under P.L. 1993, c. 243 (C. 17:51B-1 *et seq.*) and any applicable regulations in effect as of the date on which the bond to which this statement certification is attached shall have been filed with the appropriate public agency.

CERTIFICATION

(to be completed by an authorized certifying agent for each surety on the bond)

I, _____ (name of agent), as _____ (title of agent)

for _____ (name of surety),

a corporation/mutual insurance company/other (indicate type of business organization by circling one) domiciled in _____ _____ (state of domicile), DO HEREBY CERTIFY that, to the best of my knowledge, the foregoing statements made by me are true, and ACKNOWLEDGE that, if any of those statements are false, this bond is VOID and I am subject to punishment.

_____
(Signature of certifying agent)

_____
(Printed name of certifying agent)

_____
(Title of certifying agent)

_____
(Date of Certification)

MANDATORY EQUAL EMPLOYMENT OPPORTUNITY LANGUAGE
N.J.S.A. 10:5-31 et seq. (P.L. 1975, C. 127)
N.J.A.C. 17:27

CONSTRUCTION CONTRACTS

During the performance of this contract, the contractor agrees as follows:

The contractor or subcontractor, where applicable, will not discriminate against any employee or applicant for employment because of age, race, creed, color, national origin, ancestry, marital status, affectional or sexual orientation, gender identity or expression, disability, nationality or sex. Except with respect to affectional or sexual orientation and gender identity or expression, the contractor will ensure that equal employment opportunity is afforded to such applicants in recruitment and employment, and that employees are treated during employment, without regard to their age, race, creed, color, national origin, ancestry, marital status, affectional or sexual orientation, gender identity or expression, disability, nationality or sex. Such equal employment opportunity shall include, but not be limited to the following: employment, up-grading, demotion, or transfer; recruitment or recruitment advertising; layoff or termination; rates of pay or other forms of compensation; and selection for training, including apprenticeship. The contractor agrees to post in conspicuous places, available to employees and applicants for employment, notices to be provided by the Public Agency Compliance Officer setting forth provisions of this nondiscrimination clause.

The contractor or subcontractor, where applicable will, in all solicitations or advertisements for employees placed by or on behalf of the contractor, state that all qualified applicants will receive consideration for employment without regard to age, race, creed, color, national origin, ancestry, marital status, affectional or sexual orientation, gender identity or expression, disability, nationality or sex.

The contractor or subcontractor will send to each labor union, with which it has a collective bargaining agreement, a notice, to be provided by the agency contracting officer, advising the labor union or workers' representative of the contractor's commitments under this act and shall post copies of the notice in conspicuous places available to employees and applicants for employment.

The contractor or subcontractor, where applicable, agrees to comply with any regulations promulgated by the Treasurer, pursuant to N.J.S.A. 10:5-31 et seq., as amended and supplemented from time to time and the Americans with Disabilities Act.

When hiring or scheduling workers in each construction trade, the contractor or subcontractor agrees to make good faith efforts to employ minority and women workers in each construction trade consistent with the targeted employment goal prescribed by N.J.A.C. l7:27-7.2; provided, however, that the Dept. of LWD, Construction EEO Monitoring Program may, in its discretion, exempt a contractor or subcontractor from compliance with the good faith procedures prescribed by the following provisions, A, B and C, as long as the Dept. of LWD, Construction EEO Monitoring Program is satisfied that the contractor or subcontractor is employing workers provided by a union which provides evidence, in accordance with standards prescribed by the Dept. of LWD, Construction EEO Monitoring Program, that its percentage of active "card carrying" members who are minority and women workers is equal to or greater than the targeted employment goal established in accordance with N.J.A.C. l7:27-7.2. The contractor or subcontractor agrees that a good faith effort shall include compliance with the following procedures:

(A) If the contractor or subcontractor has a referral agreement or arrangement with a union for a construction trade, the contractor or subcontractor shall, within three business days of the contract award, seek assurances from the union that it will cooperate with the contractor or subcontractor as it fulfills its affirmative action obligations under this contract and in accordance with the rules promulgated by the Treasurer pursuant to N.J.S.A. 10:5-31 et. seq., as supplemented and amended from time to time and the Americans with Disabilities Act. If the contractor or subcontractor is unable to obtain said assurances from the construction trade union at least five business days prior to the commencement of construction work, the contractor or subcontractor agrees to afford equal employment opportunities minority and women workers directly, consistent with this chapter. If the contractor's or subcontractor's prior experience with a construction trade union, regardless of whether the union has provided said assurances, indicates a significant possibility that the trade union will not refer sufficient minority and women workers consistent with affording equal employment opportunities as specified in this chapter, the contractor or subcontractor agrees to be prepared to provide such opportunities to minority and women workers directly, consistent with this chapter, by complying with the hiring or scheduling procedures prescribed under (B) below; and the contractor or subcontractor further agrees to take said action immediately if it determines that the union is not referring minority and women workers consistent with the equal employment opportunity goals set forth in this chapter.

(B) If good faith efforts to meet targeted employment goals have not or cannot be met for each construction trade by adhering to the procedures of (A) above, or if the contractor does not have a referral agreement or arrangement with a union for a construction trade, the contractor or subcontractor agrees to take the following actions:

(l) To notify the public agency compliance officer, the Dept. of LWD, Construction EEO Monitoring Program, and minority and women referral organizations listed by the Division pursuant to N.J.A.C. 17:27-5.3, of its workforce needs, and request referral of minority and women workers;

(2) To notify any minority and women workers who have been listed with it as awaiting available vacancies;

(3) Prior to commencement of work, to request that the local construction trade union refer minority and women workers to fill job openings, provided the contractor or subcontractor has a referral agreement or arrangement with a union for the construction trade;

(4) To leave standing requests for additional referral to minority and women workers with the local construction trade union, provided the contractor or subcontractor has a referral agreement or arrangement with a union for the construction trade, the State Training and Employment Service and other approved referral sources in the area;

(5) If it is necessary to lay off some of the workers in a given trade on the construction site, layoffs shall be conducted in compliance with the equal employment opportunity and non-discrimination standards set forth in this regulation, as well as with applicable Federal and State court decisions;

(6) To adhere to the following procedure when minority and women workers apply or are referred to the contractor or subcontractor:

(i) The contactor or subcontractor shall interview the referred minority or women worker.

(ii) If said individuals have never previously received any document or certification signifying a level of qualification lower than that required in order to perform the work of the construction trade, the contractor or subcontractor shall in good faith determine the qualifications of such individuals. The contractor or subcontractor shall hire or schedule those individuals who satisfy appropriate qualification standards in conformity with the equal employment opportunity and non-discrimination principles set forth in this chapter. However, a contractor or subcontractor shall determine that the individual at least possesses the requisite skills, and experience recognized by a union, apprentice program or a referral agency, provided the referral agency is acceptable to the Dept. of LWD, Construction EEO Monitoring Program. If necessary, the contractor or subcontractor shall hire or schedule minority and women workers who qualify as trainees pursuant to these rules. All of the requirements, however, are limited by the provisions of (C) below.

(iii) The name of any interested women or minority individual shall be maintained on a waiting list, and shall be considered for employment as described in (i) above, whenever vacancies occur. At the request of the Dept. of LWD, Construction EEO Monitoring Program, the contractor or subcontractor shall provide evidence of its good faith efforts to employ women and minorities from the list to fill vacancies.

(iv) If, for any reason, said contractor or subcontractor determines that a minority individual or a woman is not qualified or if the individual qualifies as an advanced trainee or apprentice, the contractor or subcontractor shall inform the individual in writing of the reasons for the determination, maintain a copy of the determination in its files, and send a copy to the public agency compliance officer and to the Dept. of LWD, Construction EEO Monitoring Program.

(7) To keep a complete and accurate record of all requests made for the referral of workers in any trade covered by the contract, on forms made available by the Dept. of LWD, Construction EEO Monitoring Program and submitted promptly to the Dept. of LWD, Construction EEO Monitoring Program upon request.

(C) The contractor or subcontractor agrees that nothing contained in (B) above shall preclude the contractor or subcontractor from complying with the union hiring hall or apprenticeship policies in any applicable collective bargaining agreement or union hiring hall arrangement, and, where required by custom or agreement, it shall send journeymen and trainees to the union for referral, or to the apprenticeship program for admission, pursuant to such agreement or arrangement. However, where the practices of a union or apprenticeship program will result in the exclusion of minorities and women or the failure to refer minorities and women consistent with the targeted county employment goal, the contractor or subcontractor shall consider for employment persons referred pursuant to (B) above without regard to such agreement or arrangement; provided further, however, that the contractor or subcontractor shall not be required to employ women and minority advanced trainees and trainees in numbers which result in the employment of advanced trainees and trainees as a percentage of the total workforce for the construction trade, which percentage significantly exceeds the apprentice to journey worker ratio specified in the applicable collective bargaining agreement, or in the absence of a collective bargaining agreement, exceeds the ratio established by practice in the area for said construction trade. Also, the contractor or subcontractor agrees that, in implementing the procedures of (B) above, it shall, where applicable, employ minority and women workers residing within the geographical jurisdiction of the union.

After notification of award, but prior to signing a construction contract, the contractor shall submit to the public agency compliance officer and the Dept. of LWD, Construction EEO Monitoring Program an initial project workforce report (Form AA 201) electronically provided to the public agency by the Dept. of LWD, Construction EEO Monitoring Program, through its website, for distribution to and completion by the contractor, in accordance with N.J.A.C. 17:27-7. The contractor also agrees to submit a copy of the Monthly Project Workforce Report once a month thereafter for the duration of this contract to the Division and to the public agency compliance officer.

The contractor agrees to cooperate with the public agency in the payment of budgeted funds, as is necessary, for on-the-job and/or off-the-job programs for outreach and training of minorities and women.

(D) The contractor and its subcontractors shall furnish such reports or other documents to the Dept. of LWD, Construction EEO Monitoring Program as may be requested by the Dept. of LWD, Construction EEO Monitoring Program from time to time in order to carry out the purposes of these regulations, and public agencies shall furnish such information as may be requested by the Dept. of LWD, Construction EEO Monitoring Program for conducting a compliance investigation pursuant to **Subchapter l0 of the Administrative Code (NJAC 17:27).**

IF AWARDED A CONTRACT YOUR COMPANY/FIRM WILL BE REQUIRED TO COMLY WITH THE AFFIRMATIVE ACTION REQUIREMENTS LISTED ABOVE.

Firm Name:_____

Signature:_____

Title:_____

Date:_____

Additional Mandatory Construction Contract Language For State Agencies, Independent Authorities, Colleges and Universities Only

The Executive Order No. 151 (Corzine, August 28, 2009) and P.L. 2009, Chapter 335 include a provision which require all state agencies, independent authorities and colleges and universities to include additional mandatory equal employment and affirmative action language in its construction contracts. It is important to note that this language is in addition to and does not replace the mandatory contract language and good faith efforts requirements for construction contracts required by N.J.A.C. 17:27-3.6, 3.7 and 3.8. The additional mandatory equal employment and affirmative action language is as follows:

> It is the policy of the **[Reporting Agency]** that its contracts should create a workforce that reflects the diversity of the State of New Jersey. Therefore, contractors engaged by the **[Reporting Agency]** to perform under a construction contract shall put forth a good faith effort to engage in recruitment and employment practices that further the goal of fostering equal opportunities to minorities and women.
>
> The contractor must demonstrate to the **[Reporting Agency]**'s satisfaction that a good faith effort was made to ensure that minorities and women have been afforded equal opportunity to gain employment under the **[Reporting Agency]**'s contract with the contractor. Payment may be withheld from a contractor's contract for failure to comply with these provisions.
>
> Evidence of a "good faith effort" includes, but is not limited to:
>
> 1. The Contractor shall recruit prospective employees through the State Job bank website, managed by the Department of Labor and Workforce Development, available online at http://NJ.gov/JobCentralNJ;
> 2. The Contractor shall keep specific records of its efforts, including records of all individuals interviewed and hired, including the specific numbers of minorities and women;
> 3. The Contractor shall actively solicit and shall provide the **[Reporting Agency]** with proof of solicitations for employment, including but not limited to advertisements in general circulation media, professional service publications and electronic media; and
> 4. The Contractor shall provide evidence of efforts described at 2 above to the **[Reporting Agency]** no less frequently than once every 12 months.
> 5. The Contractor shall comply with the requirements set forth at N.J.A.C. 17:27.

To ensure successful implementation of the Executive Order and Law, state agencies, independent authorities and colleges and universities must forward an Initial Project Workforce Report (AA 201) for any projects funded with ARRA money to the Dept. of LWD, Construction EEO Monitoring Program immediately upon notification of award but prior to execution of the contract.

The College of New Jersey

NON-COLLUSION STATEMENT

Date:_____

The College of New Jersey
The Office of Budget and Finance, Department of Purchasing
Administrative Services Building, Room 201
P.O. Box 7718
Ewing, New Jersey 08628-0718

To Whom It May Concern:

This is to certify that the undersigned bidder_____ as not, either directly or indirectly, entered into any agreement, participated in any collusion, or otherwise taken any action in restraint of free competitive bidding in connection with the proposal submitted to The College of New Jersey on the_____ day of_____ , 20_____.

Signature:_____

Corporate Seal:

Attest by: _____

Sworn to and subscribed before me this_____day of _____ , 20____.

My commission Expires:_____

Notary Public

THIS STATEMENT MUST BE COMPLETED AND SIGNED

The College of New Jersey

STOCKHOLDER DISCLOSURE FORM

Firm Name: _____

Address: _____

City/State/ZIP: _____

List the names and addresses of all individuals, corporations, or any other owner having 10% or greater interest in the corporation or partnership named in item 1. If a listed owner is a corporation or partnership, then list the names and addresses of holders of 10% or more interest in that corporation or partnership. If additional space is necessary, list on an attached sheet. If there are no owners with 10% or more interest in your company, enter "None" below.

Complete affidavit at bottom of form.

Firm Name	Street	City/Twp	County	State	Zip

_____ _____

President of the Firm (Type or print name) **Telephone Number**

I certify that (check applicable blanks):

_____ A list of stockholders names and addresses has been submitted to the Secretary of State of New Jersey and it is current and correct to the best of my knowledge, with the exceptions as listed above.

_____ The list of stockholders above is current and correct to the best of my knowledge.

_____ There are no stockholders holding 10% or more interest in this corporation or firm to the best of my knowledge.

_____ Firm is a sole ownership and not subject to corporation or partnership disclosure requirement.

Signature of Authorized Representative

Name_____ Title:_____

Witnessed by_____ Date:_____

THIS FORM MUST BE COMPLETED, SIGNED, AND WITNESSED

Public Law 2005, Chapter 51

(formerly Executive Order 134) and Executive Order 117 (2008)

INFORMATION AND INSTRUCTIONS
For Completing The "Two- Year Vendor Certification and Disclosure of Political Contributions" Forms

Background Information

On September 22, 2004, then-Governor James E. McGreevey issued Executive Order 134, the purpose of which was to insulate the negotiation and award of State contracts from political contributions that posed a risk of improper influence, purchase of access or the appearance thereof. To this end, Executive Order 134 prohibited State departments, agencies and authorities from entering into contracts exceeding $17,500 with individuals or entities that made certain political contributions. Executive Order 134 was superseded by Public Law 2005, c. 51, signed into law on March 22, 2005 ("Chapter 51").

On September 24, 2008, Governor Jon S. Corzine issued Executive Order No. 117 ("E.O. 117"), which is designed to enhance New Jersey's efforts to protect the integrity of procurement decisions and increase the public's confidence in government. The Executive Order builds upon the provisions of Chapter 51.

Two-Year Certification Process

Upon approval by the State, the Certification and Disclosure of Political Contributions form (CH51.1R1/21/2009) is valid for a two (2) year period. Thus, if a vendor receives approval on Jan 1, 2009, the certification expiration date would be Dec 31, 2011. Any change in the vendor's ownership status and/or political contributions during the two-year period will require the submission of new Chapter 51/EO117 forms to the State Review Unit. **Please note that it is the vendor's responsibility to file new forms with the State should these changes occur.**

Prior to the awarding of a contract, the agency should first send an e-mail to CD134@treas.state.nj.us to verify the certification status of the vendor. If the response is that the vendor is NOT within an approved two-year period, then forms must be obtained from the vendor and forwarded for review. If the response is that the vendor is within an approved two-year period, then the response so stating should be placed with the bid/contract documentation for the subject project.

Instructions for Completing the Forms

NOTE: *Please refer to the next section, "Useful Definitions for Purposes of Ch. 51 and E.O. 117," for guidance when completing the forms.*

Part 1: VENDOR INFORMATION

Business Name – Enter the full name of the Vendor, including trade name if applicable.

Business Type -- Select the vendor's business organization from the list provided.

Address, City, State, Zip and Phone Number -- Enter the vendor's street address, city, state, zip code and telephone number.

Vendor Email – Enter the vendor's primary email address.

Vendor FEIN – Please enter the vendor's Federal Employment Identification Number.

INFORMATION AND INSTRUCTIONS
For Completing The "Two- Year Vendor Certification and Disclosure of Political Contributions" Forms

Part 2: PUBLIC LAW 2005, Chapter 51 / EXECUTIVE ORDER 117 (2008) DUAL CERTIFICATION

Read the following statements and verify that from the period beginning on or after October 15, 2004, no contributions as set forth at subsections 1(a)-(c) have been made by either the vendor or any individual whose contributions are attributable to the vendor pursuant to Executive Order 117 (2008).

NOTE: Contributions made prior to November 15, 2008 are applicable to Chapter 51 only.

Part 3: DISCLOSURE OF CONTRIBUTIONS MADE

Check the box at top of page 2 if no reportable contributions have been made by the vendor. If the vendor has no contributions to report, this box must be checked.

Name of Recipient Entity – Enter the full name of the recipient entity.

Address of Recipient Entity – Enter the recipient entity's street address.

Date of Contribution – Indicate the date of the contribution.

Amount of Contribution – Enter the amount of the reportable contribution.

Type of Contribution – Select the type of contribution from the list provided.

Contributor Name – Enter the full name of the contributor.

Relationship of Contributor to the Vendor -- Indicate relationship of the contributor to the vendor, e.g. officer or partner of the company, spouse of officer or partner, resident child of officer or partner, parent company of the vendor, subsidiary of the vendor, etc.

NOTE: If form is being completed electronically, click "Add a Contribution" to enter additional contributions. Otherwise, please attach additional pages as necessary.

Part 4: CERTIFICATION

Check box A if the person completing the certification and disclosure is doing so on behalf of the vendor and all individuals and/or entities whose contributions are attributable to the vendor.

Check box B if the person completing the certification and disclosure is doing so on behalf of the vendor only.

Check box C if the person completing the certification and disclosure is doing so on behalf of an individual and/or entity whose contributions are attributable to the vendor.

Enter the full name of the person authorized to complete the certification and disclosure, the person's title or position, date and telephone number.

INFORMATION AND INSTRUCTIONS
For Completing The "Two- Year Vendor Certification and Disclosure of Political Contributions" Forms

USEFUL DEFINITIONS FOR THE PURPOSES OF Ch. 51 and E.O. 117

- **"Vendor"** means the contracting entity.

- **"Business Entity"** means any natural or legal person, business corporation, professional services corporation, limited liability company, partnership, limited partnership, business trust, association or any other legal commercial entity organized under the laws of New Jersey or any other state or foreign jurisdiction. The definition also includes (i) if a business entity is a for-profit corporation, any officer of the corporation and any other person or business entity that owns or controls 10% or more of the stock of the corporation; (ii) if a business entity is a professional corporation, any shareholder or officer; (iii) if a business entity is a general partnership, limited partnership or limited liability partnership, any partner; (iv) if a business entity is a sole proprietorship, the proprietor; (v) if the business entity is any other form of entity organized under the laws of New Jersey or any other state or foreign jurisdiction, any principal, officer or partner thereof; (vi) any subsidiaries directly or indirectly controlled by the business entity; (vii) any political organization organized under 26 U.S.C.A. § 527 that is directly or indirectly controlled by the business entity, other than a candidate committee, election fund, or political party committee; and (viii) with respect to an individual who is included within the definition of "business entity," that individual's spouse or civil union partner and any child residing with that person.[1]

- **"Officer"** means a president, vice-president with senior management responsibility, secretary, treasurer, chief executive officer, or chief financial officer of a corporation or any person routinely performing such functions for a corporation. Please note that officers of non-profit entities are excluded from this definition.

- **"Partner"** means one of two or more natural persons or other entities, including a corporation, who or which are joint owners of and carry on a business for profit, and which business is organized under the laws of this State or any other state or foreign jurisdiction, as a general partnership, limited partnership, limited liability partnership, limited liability company, limited partnership association, or other such form of business organization.

- "**Reportable Contributions"** are those contributions, including in-kind contributions, in excess of $300.00 in the aggregate per election made to or received by a candidate committee, joint candidates committee, or political committee; or per calendar year made to or received by a political party committee, legislative leadership committee, or continuing political committee.

- **"In-kind Contribution"** means a contribution of goods or services received by a candidate committee, joint candidates committee, political committee, continuing political committee, political party committee, or legislative leadership committee, which contribution is paid for by a person or entity other than the recipient committee, but does not include services provided without compensation by an individual volunteering a part of or all of his or her time on behalf of a candidate or committee.

- **"Continuing Political Committee"** includes any group of two or more persons acting jointly, or any corporation, partnership, or any other incorporated or unincorporated association, including a political club, political action committee, civic association or other organization, which in any calendar year contributes or expects to contribute at least $4,300 to aid or promote the candidacy of an individual, or the candidacies of individuals, for elective public office, or the passage or defeat of a public questions, and which may be expected to make contributions toward such aid or promotion or passage or defeat during a subsequent election, provided that the group, corporation, partnership, association or other organization has been determined by the Commission to be a continuing political committee in accordance with N.J.S.A. 19:44A-8(b).

[1] Contributions made by a spouse, civil union partner or resident child to a candidate for whom the contributor is eligible to vote or to a political party committee within whose jurisdiction the contributor resides are permitted.

INFORMATION AND INSTRUCTIONS
For Completing The "Two- Year Vendor Certification and Disclosure of Political Contributions" Forms

- **"Candidate Committee"** means a committee established by a candidate pursuant to N.J.S.A. 19:44A-9(a), for the purpose of receiving contributions and making expenditures.

- **"State Political Party Committee"** means a committee organized pursuant to N.J.S.A. 19:5-4.

- **"County Political Party Committee"** means a committee organized pursuant to N.J.S.A. 19:5-3.

- **"Municipal Political Party Committee"** means a committee organized pursuant to N.J.S.A. 19:5-2.

- **"Legislative Leadership Committee"** means a committee established, authorized to be established, or designated by the President of the Senate, the Minority Leader of the Senate, the Speaker of the General Assembly, or the Minority Leader of the General Assembly pursuant to N.J.S.A. 19:44A-10.1 for the purpose of receiving contributions and making expenditures.

- **"Political Party Committee"** means:

    1. The State committee of a political party, as organized pursuant to N.J.S.A. 19:5-4;
    2. Any county committee of a political party, as organized pursuant to N.J.S.A. 19:5-3; or
    3. Any municipal committee of a political party, as organized pursuant to N.J.S.A. 19:5-2.

Agency Submission of Forms

The agency should submit the completed and signed Two-Year Vendor Certification and Disclosure forms, together with a completed Ownership Disclosure form, either electronically to cd134@treas.state.nj.us or regular mail at Chapter 51 Review Unit, P.O. Box 039, 33 West State Street, 9th Floor, Trenton, NJ 08625. Original forms should remain with the Agency and copies should be sent to the Chapter 51 Review Unit.

Questions & Answers

Questions regarding the interpretation or application of Public Law 2005, Chapter 51 (N.J.S.A. 19:44A-20.13) or Executive Order 117 (2008) may be submitted electronically through the Division of Purchase and Property website at http://www.state.nj.us/treasury/purchase/execorder134.htm. Responses to previous questions are posted on the website, as well as additional reference materials and forms.

NOTE*: The Chapter 51 Q&A on the website **DOES NOT** address the expanded pay-to-play requirements imposed by Executive Order 117. The Chapter 51 Q&A are only applicable to contributions made prior to November 15, 2008. There is a separate, combined Chapter 51/E.O. 117 Q&A section dealing specifically with issues pertaining to contributions made after November 15, 2008, available at http://www.state.nj.us/treasury/purchase/execorder134.htm#state.*

State of New Jersey
Division of Purchase and Property
Two-Year Chapter 51 / Executive Order 117 Vendor Certification and Disclosure of Political Contributions

For AGENCY USE ONLY

General Information

Solicitation, RFP or Contract No. _____ Award Amount _____

Description of Services _____

Agency Contact Information

Agency _____ Contact Person _____

Phone Number _____ Agency Email _____

Part 1: Vendor Information

Full Legal Business Name _____

(Including trade name if applicable)

Business Type ☐ Corporation ☐ Limited Partnership ☐ Professional Corporation ☐ General Partnership ☐ Limited Liability Company ☐ Sole Proprietorship ☐ Limited Liability Partnership

Address 1 _____ Address 2 _____

City _____ State _____ Zip _____ Phone _____

Vendor Email _____ **Vendor FEIN** _____

Part 2: Public Law 2005, Chapter 51/ Executive Order 117 (2008) Certification

I hereby certify as follows:

1. On or after October 15, 2004, neither the below-named entity nor any individual whose contributions are attributable to the entity pursuant to Executive Order 117 (2008) has solicited or made any contribution of money, pledge of contribution, including in-kind contributions, company or organization contributions, as set forth below that would bar the award of a contract to the vendor, pursuant to the terms of Executive Order 117 (2008).

   a) **Within the preceding 18 months,** the below-named person or organization has not made a contribution to:

      (i) Any candidate committee and/or election fund of any candidate for or holder of the public office of Governor or ***Lieutenant Governor***;
      (ii) Any State, county, ***municipal*** political party committee; OR
      (iii) Any ***legislative leadership committee***.

   b) **During the term of office of the current Governor(s),** the below-named person or organization has not made a contribution to

      (i) Any candidate, committee and/or election fund of the Governor or ***Lieutenant Governor***; OR
      (ii) Any State, county or ***municipal*** political party committee nominating such Governor in the election preceding the commencement of said Governor's term.

   c) **Within the 18 months immediately prior to the first day of the term of office of the Governor(s),** the below-named person or organization has not made a contribution to

      (i) Any candidate, committee and/or election fund of the Governor or ***Lieutenant Governor***; OR
      Any State, county, ***municipal*** political party committee of the political party nominating the successful gubernatorial candidate(s) in the last gubernatorial election.

PLEASE NOTE: Prior to November 15, 2008, the only disqualifying contributions include those made by the vendor or a principal owning or controlling more than 10 percent of the profits or assets of a business entity (or 10 percent of the stock in the case of a business entity that is a corporation for profit) to any candidate committee and/or election fund of the Governor or to any state or county political party within the preceding18 months, during the term of office of the current Governor or within the 18 months immediately prior to the first day of the term of Office of Governor.

Part 3: Disclosure of Contributions Made

☐ **Check this box if no reportable contributions have been made by the above-named business entity or individual.**

Name of Recipient		Address of Recipient	
Date of Contribution		Amount of Contribution	
Type of Contribution (i.e. currency, check, loan, in-kind			

Contributor Name					
Relationship of Contributor to the Vendor					
Contributor Address					
City		State		Zip	

If this form is not being completed electronically, please attach pages for additional contributions as necessary. Otherwise click "Add a Contribution" to enter additional contributions.

Part 4: Certification

I have read the instructions accompanying this form prior to completing this certification on behalf of the above-named business entity. I certify that, to the best of my knowledge and belief, the foregoing statements by me are true. I am aware that if any of the statements are willfully false, I am subject to punishment.

I understand that this certification will be in effect for two (2) years from the date of approval, provided the ownership status does not change and/or additional contributions are not made. If there are any changes in the ownership of the entity or additional contributions are made, a new full set of documents are required to be completed and submitted. By submitting this Certification and Disclosure, the person or entity named herein acknowledges this continuing reporting responsibility and certifies that it will adhere to it.

(CHECK ONE BOX A, B or C)

(A) ☐ I am certifying on behalf of the above-named business entity and all individuals and/or entities whose contributions are attributable to the entity pursuant to Executive Order 117 (2008).

(B) ☐ I am certifying on behalf of the above-named business entity only.

(C) ☐ I am certifying on behalf of an individual and/or entity whose contributions are attributable to the vendor.

Signed Name _____ Print Name _____

Phone Number _____ Date _____

Title/Position _____

Agency Submission of Forms

The agency should submit the completed and signed Two-Year Vendor Certification and Disclosure forms, together with a completed Ownership Disclosure form, either electronically to cd134@treas.state.nj.us, or regular mail at Chapter 51 Review Unit, P.O. Box 039, 33 West State Street, 9th Floor, Trenton, NJ 08625. The agency should save the forms locally and keep the original forms on file, and submit copies to the Chapter 51 Review Unit.

State of New Jersey

DISCLOSURE OF INVESTMENT ACTIVITIES IN IRAN

Solicitation Number: _____ **Bidder / Offeror:** _____

Pursuant to Public Law 2012, c. 25, any person or entity that submits a bid or proposal or otherwise proposes to enter into or renew a contract must complete the certification below to attest, under penalty of perjury, that the person or entity, or one of the person or entity's parents, subsidiaries, or affiliates, is not identified on a list created and maintained by the Department of the Treasury as a person or entity engaging in investment activities in Iran. If the Director finds a person or entity to be in violation of the principles which are the subject of this law, s/he shall take action as may be appropriate and provided by law, rule or contract, including but not limited to, imposing sanctions, seeking compliance, recovering damages, declaring the party in default and seeking debarment or suspension of the person or entity.

I certify, pursuant to Public Law 2012, c. 25, that the person or entity listed above for which I am authorized to bid/renew:

☐ is not providing goods or services of $20,000,000 or more in the energy sector of Iran, including a person or entity that provides oil or liquefied natural gas tankers, or products used to construct or maintain pipelines used to transport oil or liquefied natural gas, for the energy sector of Iran, **AND**

☐ is not a financial institution that extends $20,000,000 or more in credit to another person or entity, for 45 days or more, if that person or entity will use the credit to provide goods or services in the energy sector in Iran.

In the event that a person or entity is unable to make the above certification because it or one of its parents, subsidiaries, or affiliates has engaged in the above-referenced activities, a detailed, accurate and precise description of the activities must be provided in part 2 below to the Division of Purchase and Property under penalty of perjury. Failure to provide such will result in the proposal being rendered as non-responsive and appropriate penalties, fines and/or sanctions will be assessed as provided by law.

PART 2: PLEASE PROVIDE FURTHER INFORMATION RELATED TO INVESTMENT ACTIVITIES IN IRAN

You must provide a detailed, accurate and precise description of the activities of the bidding person/entity, or one of its parents, subsidiaries or affiliates, engaging in the investment activities in Iran outlined above by completing the boxes below.

EACH BOX WILL PROMPT YOU TO PROVIDE INFORMATION RELATIVE TO THE ABOVE QUESTIONS. PLEASE PROVIDE THOROUGH ANSWERS TO EACH QUESTION. IF YOU NEED TO MAKE ADDITIONAL ENTRIES, PLEASE ADD AN ADDITIONAL SHEET.

Name _____ Relationship to Bidder/Offeror _____

Description of Activities _____

_____

Duration of Engagement _____ Anticipated Cessation Date _____

Bidder/Offeror Contact Name _____ Contact Phone Number _____

Certification: I, being duly sworn upon my oath, hereby represent and state that the foregoing information and any attachments thereto to the best of my knowledge are true and complete. I attest that I am authorized to execute this certification on behalf of the above-referenced person or entity. I acknowledge that the State of New Jersey is relying on the information contained herein and thereby acknowledge that I am under a continuing obligation from the date of this certification through the completion of any contracts with the State to notify the State in writing of any changes to the answers of information contained herein. I acknowledge that I am aware that it is a criminal offense to make a false statement or misrepresentation in this certification, and if I do so, I recognize that I am subject to criminal prosecution under the law and that it will also constitute a material breach of my agreement(s) with the State of New Jersey and that the State at its option may declare any contract(s) resulting from this certification void and unenforceable.

Full Name (Print): _____ Signature: _____

Title: _____ Date: _____

PB-MP.1 R10/2011

MACBRIDE PRINCIPLES FORM

BIDDER'S REQUIREMENT: TO PROVIDE A CERTIFICATION IN COMPLIANCE WITH MACBRIDE PRINCIPLES AND NORTHERN IRELAND ACT OF 1989

Pursuant to Public Law 1995, c. 134, a responsible bidder selected, after public bidding, by the Director of the Division of Purchase and Property, pursuant to N.J.S.A. 52:34-12, or the Director of the Division of Building and Construction, pursuant to N.J.S.A. 52:32-2, must complete the certification below by checking one of the two representations listed and signing where indicated. If a bidder who would otherwise be awarded a purchase, contract or agreement does not complete the certification, then the Directors may determine, in accordance with applicable law and rules, that it is in the best interest of the State to award the purchase, contract or agreement to another bidder who has completed the certification and has submitted a bid within five (5) percent of the most advantageous bid. If the Directors find contractors to be in violation of the principles which are the subject of this law, they shall take such action as may be appropriate and provided by law, rule or contract, including but not limited to, imposing sanctions, seeking compliance, recovering damages, declaring the party in default and seeking debarment or suspension of the party.

I certify, pursuant to N.J.S.A. 52:34-12.2 that the entity for which I am authorized to bid:

☐ has no ongoing business activities in Northern Ireland and does not maintain a physical presence therein through the operation of offices, plants, factories, or similar facilities, either directly or indirectly, through intermediaries, subsidiaries or affiliated companies over which it maintains effective control; or

☐ will take lawful steps in good faith to conduct any business operations it has in Northern Ireland in accordance with the MacBride principles of nondiscrimination in employment as set forth in N.J.S.A. 52:18A-89.8 and in conformance with the United Kingdom's Fair Employment (Northern Ireland) Act of 1989, and permit independent monitoring of their compliance with those principles.

I certify that the foregoing statements made by me are true. I am aware that if any of the foregoing statements made by me are willfully false, I am subject to punishment.

Signature: _____

Print Name: _____

Title: _____

Firm Name: _____

Date: _____

The College of New Jersey

VENDOR QUALIFICATION SHEETS

Vendors are requested to submit evidence of qualifications to meet all requirements as required by the Office of Finance & Business Services at The College of New Jersey by providing the information listed below.

If this information is being requested as part of an RFP or RFQ, vendors may be requested to furnish additional information for clarification purposes. This will in no way change the vendor's original proposal.

TO BE COMPLETED BY VENDOR

1. Please list the types of commodities that your company can provide.

   A.

   B.

   C.

2. The number of years your firm has been providing these services. _____ Year(s)

3. Location of vendor's office that will be responsible for managing contract/service:

   Name: _____

   Telephone: _____ Fax:_____

   Email Address: _____

   Street Address: _____

   City/State/Zip: _____

   Federal Identification Number: _____

4. Address where all purchase orders and payment are to be mailed by users of any contract(s) resulting from this proposal (if different from above).

   Purchase Orders:

   Firm Name: _____

   Street Address: _____

   City/State/Zip: _____

   Remittances:

   Firm Name: _____

   Street Address: _____

   City/State/Zip: _____

VENDOR QUALIFICATIONS- continued

5. Name of insurance company:

   Street Address: _____

   City/State/Zip: _____

   Types of Insurance: _____

6. Name of individual to contact for sales/services information:

   Name: _____

   Telephone: _____

   Email Address: _____

   Street Address: _____

   City/State/Zip: _____

7. List the names and titles of personnel who will service this contract:

   _____

   _____

   _____

8. Is your firm registered with the Secretary of State of New Jersey? **Yes_____ No_____**

9. Is your firm incorporated? **Yes_____ No_____**

   A) In What State? _____

10. Is your firm considered a small business in the State of New Jersey? **If yes, please attach a certificate or certification statement from the New Jersey Commerce and Economic Growth Commission.** If no and you would like to register, please contact the New Jersey Commerce and Economic Growth Commission at 609-777-0885.

    Small Business: **Yes_____ No_____**

    A) What category does your firm fall under?

    Gross Revenues do not exceed $500,000 _____

    Gross Revenues do not exceed $5 million _____

    Gross Revenues do not exceed $12 million _____

Under Executive Order 34, TCNJ is responsible for soliciting demographic information from its vendors. TCNJ is required to seek the following information from each firm under contract with us:

1. Is more than fifty percent (50%) of your company minority owned? (circle one) YES NO
   (African-American, Hispanic, Asian, and/or Native American)

2. Is more than fifty percent (50%) of your company woman owned? (circle one) YES NO

3. What is the ethnicity of the owner of your company: (check applicable according to 51% ownership)

   ☐ Asian American
   ☐ Multiple Ethnicities
   ☐ Non-Minority
   ☐ Hispanic American
   ☐ African American
   ☐ Caucasian American Female
   ☐ Native American
   ☐ Unspecified

TCNJ is required to solicit the foregoing information. Your response, however, is **strictly voluntary**. Please be advised that any contracting decisions made by TCNJ will **not** be influenced in any way by your decision to provide the above information.

EXECUTIVE ORDER #34: MINORITY AND WOMEN BUSINESS ENTERPRISES

On September 15, 2006, Governor Corzine signed Executive Order 34 establishing a Division of Minority and Women Business Development. The Division is charged with administering and monitoring policies, practices, and programs to ensure that New Jersey owned minority and women business enterprises (MWBE) are afforded an equal opportunity to participate in New Jersey's purchasing and procurement processes.

State entities are required to report to the Division the ethnic and gender composition of the vendors with which we do business.

VENDOR QUALIFICATIONS-

11. Please provide a list of former or present clients. Also, indicate the name of a contact person and telephone number for reference purposes. **Any personnel from The College of New Jersey listed as a reference will not be considered a valid reference.**

A. **Client Name:**

Contact Name:

Telephone Number:

Fax Number:

Email Address:

B. **Client Name:**

Contact Name:

Telephone Number:

Fax Number:

Email Address:

C. **Client Name:**

Contact Name:

Telephone Number:

Fax Number:

Email Address:

D. **Client Name:**

Contact Name:

Telephone Number:

Fax Number:

Email Address:

VENDOR QUALIFICATIONS- continued

12. Please answer the following questions related to your prior experience:

a. Has the bidder been found, though either court adjudication, arbitration, mediation, or other contractually stipulated alternate dispute resolution mechanism, to have: failed to provide or perform goods or services; or failed to complete the contract in a timely manner; or otherwise performed unsatisfactorily under a prior contract with the contracting unit? If yes, attach summary of details on a separate sheet.

Yes_____ No_____

b. Has the bidder defaulted on a contract, thereby requiring the local unit to utilize the services of another contractor to provide the goods or perform the services or to correct or complete the contract? If yes, attach summary of details on a separate sheet.

Yes_____ No_____

c. Has the bidder defaulted on a contract, thereby requiring the local unit to look to the bidder's surety for completion of the contract or tender of the costs of completion? If yes, attach summary of details on a separate sheet.

Yes_____ No_____

d. Has the bidder been debarred or suspended from contracting with any of the agencies or departments of the executive branch of the State of New Jersey at the time of contract award, whether or not the action was based on experience with the contracting unit. If yes, attach summary of details on a separate sheet.

Yes_____ No_____

Firm Name:_____

Signature:_____

Title:_____

Date:_____

CONTRACT FOR CONSTRUCTION

Agreement made on , 2014 between The College of New Jersey as the project owner, and, as the Construction Contractor

Contractor:
Address:

Project: Campus Town Sidewalks

1. **EMPLOYMENT OF CONTRACTOR/PROJECT DESCRIPTION**. The College employs the Contractor and the Contractor agrees to perform the construction for the project identified above. The project is described in the College's plans and specifications prepared by the project architect.

2. **CONTRACT DOCUMENTS**. This contract includes the plans and specifications, and also the following documents:

    1. Request for Bids
    2. Contractor's Bid
    3. General Conditions of the Contract for Construction
    4. Addenda and clarifications issued before the bid due date
    5. Project Bidding Schedule

3. **PROJECT ARCHITECT**. The project architect is responsible for the design of the project, acting as the College's representative on the project, and performing the duties of the project architect during the construction and completion of the project. The project architect is:

    AE Firm:
    Address:

4. **SCOPE OF WORK**. The Contractor shall perform the construction work specified in this contract including the contract documents. The Contractor shall assume full responsibility for constructing and completing the project and all the work in this contract and the contract documents, including providing all labor, subcontractors, materials and equipment required, and providing all supervision, management, and scheduling required in the general conditions and as noted throughout the contract documents.

5. **CONTRACT TIMES**. All dates and durations specified for the start of construction, the milestones dates specified in this contract and the substantial completion and final completion of the project are agreed to be of the essence.

    a. **CONSTRUCTION START.** The construction work shall start no later than10 calendar days after the College issues a Notice to Proceed to the Contractor.

    b. **MILESTONES.** The construction tasks or activities shall be completed within the following number of calendar days after the construction start date (the actual dates will be set forth in the Notice to Proceed):

    c. **SUBSTANTIAL COMPLETION**. The construction work and the project shall be substantially completed, meaning capable of being reasonably utilized for the purpose intended, within

_____ calendar days after the construction start date (the actual date will be set forth in the Notice to Proceed). Substantial Completion pertains to all milestone dates of the project schedule.

d. FINAL COMPLETION. The construction work, the project and the contract shall be finally completed within _____ calendar days after the construction start date (the actual date will be set forth in the Notice to Proceed). The requirements for final completion are defined in the general conditions of the contract for construction as well as the technical specifications of the project.

e. DELAYS AND EXTENSIONS OF CONTRACT DATES.

1. **Delays Warranting Extensions.** If the Contractor is unavoidably prevented from completing any part of the work within the milestone, substantial completion or final completion dates in this contract by causes beyond the control and without the fault of the Contractor or its subcontractors, those contract dates will be extended by amounts equal to the time lost due to such delays, provided the Contractor requests extensions in accordance with the general conditions. The Contractor's right to extensions, the terms and conditions of extensions, and the right to extra compensation for certain extensions shall be governed by the general conditions.

2. **Requests for Extensions.** The Contractor must provide the College with a written notice of delay and request for an extension within 24 hours of the beginning of a delay, or it will not be entitled to an extension. Written notices and requests must comply with the general conditions, and the failure to submit them will preclude the Contractor from making any claim for an extension under the contract.

f. EXTENSION TERMS. The contract dates will be extended for the delays specified in the general conditions to the extent the delays prevent completion of the work required by the contract dates and shall be calculated in accordance with the general conditions. When there is a delay warranting an extension of the contract dates, the College is not required to authorize extra compensation to fund efforts to reduce or eliminate the effect of the delay, but if the College elects to do so, and requires such efforts as a change to the contract, the Contractor shall perform the extra work and be entitled to extra compensation for it under the change order provisions in the contract and the general conditions. The possibility of additional compensation to accelerate because of delays shall not apply to delays for which the Contractor is responsible under the contract and general conditions.

6. LIQUIDATED DAMAGES FOR DELAY. If the Contractor fails to substantially complete the project by the substantial completion date specified, the Contractor shall pay the following amounts as liquidated damages for delay for each calendar day that the project is not substantially complete beyond the substantial completion date. Liquidated damages shall be established at $1/20^{th}$ of 1% of the base contract amount per calendar day.

The College and the Contractor agree that the actual loss to the College from construction delays and the inability to use the project in a substantially completed state are for the most part difficult to quantify, and that the foregoing liquidated damages formula results in damages amounts that are reasonable and are not penalties and are not intended to be penalties. The College and the Contractor agree that the amount of liquidated damages per calendar day for delays in the substantial completion of the project is a reasonable estimate of the damage to the College for not being able to use the project in a substantially completed state. The College may deduct liquidated damages from payments due under this contract, but its failure to withhold liquidated damages to assert claims for liquidated damages shall not be deemed a waiver of the College's right to withhold or to assert claims for damages for any delays which occur at any time on the project.

7. **CONTRACT PRICE**. The Contractor shall be paid $_____ for the complete performance of this contract which was proposed by the Contractor in its bid and accepted by the College. The Contractor shall be entitled to additional compensation for authorized changes which include the cost of the changes and mark-ups included in change orders approved by the College in accordance with the change order provision in the general conditions.

8. **PAYMENTS TO CONTRACTOR**. The Contractor will be paid by the College in accordance with this paragraph and the general conditions in the contract.

a. **MONTHLY PROGRESS PAYMENTS.** The College will make progress payments as the work proceeds based on written invoices submitted monthly by the Contractor and approved by the architect and the College. No payments will be made until the Contractor submits a unit schedule break down showing the portions of the total contract price for each principal category of work and value loaded CPM schedule allocating the contract price among the schedule activities. Monthly progress payment amounts shall be based on the percentages of the work completed as of the end of the pay period (less earlier payments). All payment requests or invoices and all payments shall be governed by the general conditions as well as the special requirements of this contract, including the requirement that progress payments shall be based on a unit schedule breakdown and a value loaded CPM schedule.

b. **RETAINAGE**. The College will retain 2% of monthly progress payments as retainage. After the contract construction work is 50% complete based on the unit schedule breakdown, CPM schedule updates and approved invoices, the College may make monthly progress payments less 2% retainage until the project has achieved substantial completion, at which time, at the owner's discretion, the retainage may be reduced until final completion of the project. The holding and release of retainage shall be governed by the general conditions.

c. **CHANGE ORDERS.** The Contractor shall invoice for change order work in the monthly contract progress payment invoices as the change order work is performed, but only after a written change order and TCNJ issued Purchase Order has been signed by the College.

d. **FINAL PAYMENT.** Upon final completion of all work included in the contract including all change orders, upon acceptance of the work by the architect and the College, upon the satisfactory completion of all of the requirements in the general conditions for completion, and upon the issuance of the certificate of final completion, the Contractor will be paid the fully adjusted contract balance including any retainage withheld. The invoice for final payment and final payment shall also be subject to the general conditions and the special requirements of this contract.

e. **PAYMENT TERMS.** All invoices and payments shall also be subject to the general conditions, including the provisions regarding payments, and to the right of the College to withhold payments or to make deductions from payments. See also the Prevailing Wage Act requirements in paragraph 22. The College will pay proper final invoices within 30 days of their submission to the College with the approval of the architect.

f. **SUBMISSION OF INVOICES:** Prior to the submission of the invoice, the contractor will submit to the owner and architect, in draft form, a "pencil copy" of the monthly invoice for review and approval setting forth each line item the contractor intends to request payment in that invoice based on the claimed percent completed for that line item. Upon receipt of said "pencil copy", the owner and architect shall observe the work and in place and, on the basis of such observations, will either approve the amounts requested or modify the contractor's request, based on the owners independent assessment of the work in place. The owner will then return the pencil copy invoice to the contractor for the contractor to then adjust and submit the final invoice with the agreed to percentages completed per line item to the owner for payment. No invoice shall be submitted for payment until all amounts and completion percentages have been determined in this manner.

g. For the purposes of the State's Prompt Payment of Contractors and Subcontractors Act (N.J.S.A. 2A:30A-1, et seq.)

(1) An invoice will be deemed to have been received when it is received by the owner at the address designated in the pre-construction conference for receipt of the invoices.
(2) The "billing date" as that term is used in N.J.S.A. 2A:30A-2 shall be the earlier of the date upon which an invoice for payment is approved for payment or 20 days after the invoice is received, unless within such 20 day period the invoice is found to be incomplete or otherwise unacceptable and returned to the contractor, with a written explanation of deficiencies.
(3) In the event that an invoice is found to be deficient and returned to the contractor, the "billing date" shall be calculated from the date that a corrected invoice is received.
(4) Payment shall be considered to have been made on the date on which a check for such payment is dated.
(5) Payment terms (e.g. "net 20") offered by the contractor shall not govern the owners obligation to make payment.
(6) The following periods of time will not be included in the calculation of the due date of any contractor invoice:

- Anytime elapsed between receipt of an improper invoice and its return to the contractor, not to exceed 20 calendar days; or
- Any time elapsed between the owner's return of an improper invoice to the contractor and the owner's receipt of a corrected invoice.

h. LIMITATIONS ON APPLICABILITY: The provisions of this Article shall not govern the owner's payment obligations nor shall they supersede or modify any other contractual provision allowing the withholding of monies from the contractor to the extent that the contractor has not performed in accordance with the provisions of the contract. Nor shall this Article govern the owner's payment obligations nor supersede or modify any other contractual provision governing contractor claims for additional compensation beyond the base contract price and approved change orders.

i. INTEREST: Interest shall be payable on amounts due the contractor if not paid within thirty (30) calendar days after the billing date specified in the above subparagraph, as provided under the State's Prompt Payment of Contractors and Subcontractors Act. Interest on amounts due shall be payable to the contractor for the period beginning on the day after the required payment date and ending on the date on which the check for payment is drawn. Interest may be paid by separate payment to the contractor, but shall be paid within 30 days of payment of the principal amount of the approved invoice. Nothing in this article shall be construed as entitling the contractor to payment of interest on any sum withheld by the owner for any reason permitted under the contract or applicable law, or on any claim for additional compensation, over and above sums due under the base contract or approved change orders.

j. SUSPENSION OF PERFORMANCE: A contractor not paid sums due under an approved invoice within thirty (30) days of the billing date may suspend performance without penalty for breach of contract, but only after providing the owner with seven (7) days written notice of non-payment, and only in the event that the owner fails to furnish the contractor, within that seven day period, with a written statement of the amount withheld and the reasons for the withholding. Nothing herein shall be construed to excuse the contractor's nonperformance, or to limit the owner's rights and remedies relating to such nonperformance, with regard to any monies withheld from the contractor upon the proper notice provided under this Article, or with regard to any contractor claim disputed by the owner.

k. Alternative Dispute Resolution: Disputes regarding nonpayment of a contractor's invoice under this Article may be submitted to a mediator upon agreement of the College. In such event, the College and the contractor shall share equally the fees and expenses of the selected mediator. Provided, however, that nothing

herein shall be construed, in whole or in part, as a waiver, release or modification of the provisions of the New Jersey Contractual Liability Act, N.J.S.A. 59:13-1, et seq., as it governs claims against the College.

9. **CHANGES, CHANGE ORDERS AND CHANGE ORDER DELAYS**. The College may at any time authorize and direct written changes in the work which change the scope of the work and which increase or decrease the contract price. All changes including adjustments of the contract price shall be governed by this paragraph and the change order provision in the general conditions. If a change issued by the College delays the completion of any activity in the project CPM schedule, the time allowed for that activity shall be extended, and if a delay in that activity delays other activities, the critical path or the completion dates in the contract, then they too will be extended. The Contractor shall make reasonable efforts in scheduling changed work so that it does not delay or extend activities in the CPM schedule critical path, including the substantial and final project completion dates. The Contractor shall also make alternate proposals for change order work which include acceleration for the changed work where feasible to achieve this goal, and shall include the cost of such efforts in its change order requests and proposals. Change orders must specify whether they result in any delay (or extension) to any activities in the schedule, including an identification of the activities and the amount of delay in each. If no delay or extension is specified in a change order, it will be deemed an agreement by the College and the Contractor that no delay or extension results from the change order.

10. **CONTRACTOR'S REPRESENTATIONS**. The Contractor represents to the College that it has:

a. **EXAMINATION OF CONTRACT DOCUMENTS**. Examined and carefully studied the contract documents and the other documents in the bid documents, and that they are sufficient for performing the contract work at the contract price.

b. **EXAMINATION OF SITE**. Visited the site and become familiar with and is satisfied as to the general, local and site conditions that may affect the cost, progress, and performance of the contract work.

c. **FAMILIARITY WITH LAW.** Familiarized itself with all federal, state, and local laws and regulations that may affect the cost, progress, and performance of the contract work.

d. **FAMILIARITY WITH OTHER INFORMATION AND OTHER DOCUMENTS.** Carefully studied all reports of investigations and tests of site and subsurface conditions at or contiguous to the site and all drawings of physical conditions at the site including surface or subsurface composition, water, structures and utilities at or near to the site.

e. **ADDITIONAL INFORMATION NOT REQUIRED FOR BIDDING OR CONTRACT PERFORMANCE.** Does not consider that any further examinations, investigations, explorations, tests, studies, or data are necessary for the performance of the work at the contract price.

11. **ASSIGNMENT OF CONTRACT**. The Contractor may not assign this contract or any rights under or interests in the contract including its right to payments under the contract.

12. **CONTRACTOR PERSONNEL ASSIGNED. The College reserves the right to request and have any member of the contractor's or subcontractor's staff replaced on the project for any reason.**

13. **DOMESTIC MATERIALS -** N.J.S.A. 52:33-2. Notwithstanding any inconsistent provision of any law, and unless the head of the department, or other public officer charged with the duty by law, shall determine it to be inconsistent with the public interest, or the cost to be unreasonable, only domestic materials shall be acquired or used for any public work.

This section shall not apply with respect to domestic materials to be used for any public work, if domestic materials of the class or kind to be used are not mined, produced or manufactured, as the case may be, in the United States in commercial quantities and of a satisfactory quality.

14. **NOTIFICATIONS/AUTHORIZED REPRESENTATIVE:**

a. **Notice to the Contractor**. Written notices to the Contractor should be addressed to:

_____
_____
_____
_____

b. **Notice to the College/Authorized Representative:** Written notices from the Contractor to the College should be addressed to:

William Rudeau, Director of Construction
The College of New Jersey
PO Box 7718,
Ewing, New Jersey 08628

The College's contracting officer hereby authorizes the Owner's project representative to receive all contract related correspondence.

15. **CLAIMS BY THE CONTRACTOR.**

a. **GENERAL PROVISIONS APPLICABLE TO ALL CLAIMS .** Claims by the Contractor against the College shall be subject to the New Jersey Contractual Liability Act, N.J.S.A. 59:13-1, et seq. including the notice and time for suit provisions. For the purpose of determining the time within which The Contractor must file suit under the New Jersey Contractual Liability Act, 'completion of the contract' shall be deemed to have occurred upon achievement of substantial completion as defined in section 12A of these General Conditions.

The Contractor also agrees that it shall not be entitled to assert claims against the College for any compensation beyond that provided for in this contract by reason of the acts or omissions of any third parties, including but not limited to the project architect and any other contractor on this project. The Contractor also agrees that it may not assert claims for extra costs for home office expenses, home office overhead, lost profits or revenue or consequential damages as that term is defined in law. All claims shall also be subject to the terms of this contract including the general conditions, and the Contractor may not assert any claims for extra costs unless it maintains all the records of its estimated and actual costs as required by paragraph 16 and the general conditions. The Contractor also agrees that suits against the College must be pursued in the county where the project is located.

1. Notice of litigation shall be filed in writing with the other party to the Owner-Contractor Agreement and with the court having competent jurisdiction and a copy shall be filed with the Architect and the Construction Manager. The litigation shall be made within the time limits specified herewith where applicable, and in all other cases within a reasonable time after the claim, dispute and other matter in question has arisen, and in no event shall it be made after the date when institution of legal or equitable

proceedings based on such claim, dispute or other matter in question would be barred by the applicable statute of limitations.

2. Unless otherwise agreed in writing, the Contractor shall carry on the Work and maintain its progress during any proceedings, and the Owner shall continue to make payments to the Contractor in accordance with the Contract Documents.

b. DELAY CLAIMS. The Contractor agrees that it may not assert claims for extra compensation by reason of any delays in its work resulting from acts or omissions of any third parties irrespective of extensions granted under paragraph 5, including but not limited to delays caused by third parties such as the project architect, other contractors, utilities and governmental authorities. The College shall only be required to pay additional compensation for delays caused by the College itself, and only to the extent required by N.J.S.A. 2A:58B-3 (delayed performance caused by the College's own negligence, bad faith, active interference or other tortuous conduct, but not for reasons contemplated by the parties and not for the negligence of others including others under contract with the College on the theory that such negligence should be imputed to the College). The College shall not be liable for any period of delay when there is a concurrent delay for which it is not responsible. Finally, the Contractor also agrees that it can only assert claims for extra costs due to delays for extra costs at the job site, and may not assert claims for extra costs for home office expenses, home office overhead, lost profit or revenue, or consequential damages as that term is defined in law.

c. CLAIMS BASED ON CONTRACT DOCUMENTS AND INFORMATION PRIOR TO BIDDING. The Contractor agrees that it can assert no claims for extra compensation beyond the bid and contract price for constructing the completed project by reason of any errors, omissions or deficiencies in the contract documents to the extent that a reasonably competent contractor should discovery the error, omission or deficiency in connection with the preparation of a bid because of its obligation to review and study the bid documents before submitting its bid, and because of its representation in paragraph 10 that it did so. In addition, the Contractor agrees that it can assert no claims for extra compensation beyond the bid and contract price for constructing the completed project by reason any lack of information affecting the construction of the project at the time of bidding, or errors in the information included or referenced in the bid documents except to the extent permitted by Article 1 of the general conditions. The Contractor shall notify the College in writing before submitting its bid of any errors or omissions in the information provided or be precluded from seeking extra compensation or asserting a claim.

d. MEDIATION. If a dispute or claim arises out of or relates to this contract, or the breach thereof, and if the dispute cannot be settled through negotiation, the parties agree first to try in good faith to settle the dispute by mediation administered by the American Arbitration Association under its Construction Industry Mediation Rules before resorting to arbitration or litigation. The Owner reserves the right to request a mediation if it deems it necessary.

16. COST RECORDS FOR EXTRAS, AUDITS, CLAIMS: Pursuant to N.J.A.C. 17:44-2.2, the Contractor shall maintain all documentation related to products, transactions or services under this contract for a period of five years from the date of final payment. Such records shall be made available to the New Jersey Office of the State Comptroller upon request.

The Contractor shall maintain and retain weekly payroll, material, subcontractor, supplier, overhead and other cost and accounting records for the project, and for additional services or extras required by

the College, including all costs which the Contractor is entitled to be paid under the contract. The Contractor shall require its subcontractors on the project to do likewise. The Contractor shall also maintain all estimates and takeoffs used in preparing and calculating its bid price. The records shall be maintained and shall be made available to the College or its representatives when requested. These records shall be maintained in accordance with generally accepted accounting principles and practices for a period of 5 years after final payment is received by the Contractor, or the duration of any dispute or lawsuit arising out of the project, whichever is later. Any failure to maintain or produce such records shall preclude the Contractor from being paid or retaining any payments which are based on costs or which should be, and expenses of it or its subcontractors including extra costs which are reflected in the records. This includes the basic contract compensation as well as extra compensation for change orders and claims of any kind.

17. **INDEMNITY/LIABILITY TO THIRD PARTIES:** The Contractor agrees to defend, indemnify and save harmless the College and its officers, agents, servants and employees from and against any and all suits, demands, claims, losses and damages of any kind arising out of, or claimed to have arisen out of any negligent act, error, omission or breach by the Contractor, its officers, agents, servants, employees, consultants, subcontractors or suppliers, in the performance of this contract. The Contractor shall, at its own expense, defend, and pay all charges for attorneys and all costs and other expenses arising from such suits or claims. If any judgment is rendered against the College or any of its officers, agents, servants or employees for which indemnification is required under this paragraph, the Contractor shall satisfy and discharge it. The College shall give prompt written notice to the Contractor of claims and suits for which indemnity is required in this paragraph.

18. **INSURANCE BY THE CONTRACTOR:** The Contractor shall procure and maintain at its own expense, insurance for damages imposed by law and assumed under this contract until at least 1 year after the completion and acceptance of the project. The insurance shall be of the kinds and in the amounts required in this paragraph, and shall be issued by insurance companies approved to do business in New Jersey. The College of New Jersey, the State of New Jersey, and the NJ Educational Facilities Authority shall be named as an additional insured on the Commercial General Liability Insurance policy. The Contractor expressly agrees that any insurance protection required by this contract shall in no way *limit* the Contractor's obligations under this contract, and shall not be construed to relieve the Contractor from liability in excess of such coverage. Nor shall it preclude the College from taking such actions as are available to it under any other provisions of this contract or law.

a. TYPES AND MINIMUM AMOUNTS OF INSURANCE REQUIRED:

(1) Commercial General Liability Insurance (CGL). Commercial General Liability insurance ISO 1088 or later occurrence form of insurance including contractual liability with limits of at least $1,000,000 combined single limit for bodily injury and property damage liability for each occurrence. The CGL policy shall also include products/completed operations with limits of at least $1,000,000 per occurrence. This insurance shall be maintained for at least 1 year after the completion of the project.

(2) Automobile Liability Insurance. The Automobile Liability Insurance policy shall cover owned, non-owned and hired vehicles and have limits of at least $1,000,000 combined single limit for bodily injury and property damage for each occurrence.

(3) Workers Compensation/ Employer Liability. Workers Compensation Insurance shall be maintained by the Contractor and all subcontractors in accordance with the requirements of the law of New Jersey. They shall also maintain Employer's Liability insurance with limits of at least $500,000 for each occurrence.

b. EVIDENCE OF INSURANCE. The Contractor shall when this contract is signed and before beginning the work required under this contract, provide the College with valid certificates of insurance signed by an insurance provider or authorized agent or underwriter to evidence the Contractor's insurance coverage as required in this paragraph, and also copies of the policies themselves. The certificates of insurance shall specify that the insurance provided is of the types and in the amounts required in this paragraph, and that the policies cannot be canceled except after 30 days written notice to the College.

c. CANCELLATION. The certificates of insurance shall provide for 30 days written notice to the College before any cancellation, expiration or non-renewal during the term the insurance is required by this contract. The Contractor shall also be required to provide the College with valid certificates of renewal when policies expire. The Contractor shall also, when requested, provide the College with additional copies of each policy required under this contract, which are certified by an agent or underwriter to be true copies of the policies issued to the Contractor.

d. REMEDIES FOR LACK OF INSURANCE. If the Contractor fails to renew any of its required insurance policies, or any policy is canceled, terminated or modified, the College may refuse to pay monies due under this contract. The College, in its sole discretion and for its sole benefit, may use monies retained under this paragraph to attempt to renew the Contractor's insurance or obtain substitute coverage if possible for the College's sole benefit, and may invoke other applicable remedies under the contract including claims against the Contractor and its surety. During any period when the required insurance is not in effect, the College may also, in its sole discretion, either suspend the work under the contract or terminate the contract.

19. PAYMENT AND PERFORMANCE BOND. The Contractor is required to furnish the College with a payment bond and a performance bond from an approved surety as described in the general conditions and bid documents. They shall conform to N.J.S.A. 2A:44-147. This contract will not become effective until these bonds are provided to and approved by the College. The bonds must also be accompanied by the surety disclosure statement and certification required by N.J.S.A. 18A:64-68.

20. ABANDONMENT, POSTPONEMENT, TERMINATION OF PROJECT: The College reserves the right to terminate this contract for convenience at any time by written notice to the Contractor. Unless otherwise directed, the Contractor shall immediately stop all work upon receipt of such a notice. The College also reserves the right to suspend performance and to terminate for default or improper performance by the Contractor. The rights and duties of the Contractor and the College in the event of a termination or a suspension shall be governed by the general conditions.

21. CONTRACT TERMS, CHANGES, AND LAW: This contract (including the completed checklist which is attached) constitutes the entire agreement between the College and the Contractor, and it shall be governed by the law of New Jersey. The terms and conditions of this contract may not be changed except by a writing signed by the Contractor and the College.

22. PREVAILING WAGE STATUTE. The Contractor must comply with the New Jersey Prevailing Wage Act, N.J.S.A. 34:11-56.25 through 56.57. Workers employed by the Contractor or any subcontractor or sub-subcontractor in the performance of services directly on the project must be paid prevailing wages. As required by N.J.S.A. 34:11-56.27 and 56.28, this contract cannot become effective until the College obtains from the New Jersey Department of Labor a determination of the prevailing wage rates applicable to the project as of the contract award date and attaches a copy to the contract. As required by N.J.S.A. 34:11-56.27, the Contractor or any subcontractor may be terminated

if any covered worker is not paid prevailing wages on the project, and the Contractor and its surety shall be liable for any additional costs which result. The Contractor and its subcontractors must be registered with the New Jersey Department of Labor (N.J.S.A. 34:11-56.51 et seq.), and the prevailing wage rates must be posted at the job site (N.J.S.A. 34:11-56.32). The Contractor and its subcontractors must prepare accurate certified records of wages paid for each worker on the project (N.J.S.A. 34:11-56.29), and copies for the period covered by each invoice must be attached to the invoice submitted under the contract. In accordance with N.J.S.A. 34:11-56.33, the Contractor's final invoice must include a statement of all amounts still then due to workers on the project. The Contractor is also cautioned that it must use job titles and worker classifications consistent with those approved by the Department of Labor, and that, if it intends to pay apprentice rates, it must comply with the Department of Labor's regulations at N.J.A.C. 12:60-7.1 through 7.4.

23. **DISCRIMINATION IN EMPLOYMENT.** The Contractor and any subcontractors employed by it shall comply with N.J.S.A. 10:2-1 through 10:2-4 and N.J. S.A. 10:5-1 et seq., including N.J.S.A. 10:5-31 through 35, which prohibit discrimination in employment in public contracts. The statute and the rules and regulations promulgated thereunder shall be considered to be part of this contract and binding upon the Contractor and its subcontractors. If the College is notified of any violation of the public contract awarding regulations in accordance with N.J.A.C. 17:27-7.4 concerning the financing of minority and women outreach and training programs, the College reserves the rights to deduct the outreach and training allocation from the contract. During the performance of this contract, the Contractor agrees that:

a. In the hiring of persons for the performance of work under this contract or any subcontract hereunder, or for the procurement, manufacture, assembling or furnishing of any such materials, equipment, supplies or services to be acquired under this contract, no contractor, nor any person acting on behalf of such contractor or subcontractor, shall, by reason of race, creed, color, national origin, ancestry, marital status, gender identity or expression, affectional or sexual orientation or sex, discriminate against any person who is qualified and available to perform the work to which the employment relates;

b. No contractor, subcontractor, nor any person on his behalf shall, in any manner, discriminate against or intimidate any employee engaged in the performance of work under this contract or any subcontract hereunder, or engaged in the procurement, manufacture, assembling or furnishing of any such materials, equipment, supplies or services to be acquired under such contract, on account of race, creed, color, national origin, ancestry, marital status, gender identity or expression, affectional or sexual orientation or sex;

c. There may be deducted from the amount payable to the contractor by the contracting public agency, under this contract, a penalty of $50.00 for each person for each calendar day during which such person is discriminated against or intimidated in violation of the provisions of the contract; and

d. This contract may be canceled or terminated by the contracting public agency, and all money due or to become due hereunder may be forfeited, for any violation of this section of the contract occurring after notice to the contractor from the contracting public agency of any prior violation of this section of the contract.

24. **COMPLIANCE WITH PROCUREMENT STATUTES:** The Contractor warrants and represents that this contract has not been solicited or secured, directly or indirectly, in a manner contrary to the law of New Jersey, and in particular the provisions of N.J.S.A. 18A:64-6.1, 6.2 and 6.3, and that the Contractor has not and shall not violate the law of New Jersey relating to the procurement of or the performance of this contract by any conduct, including the paying of any gratuity of any kind, directly or indirectly, to any College employee or officer. Any violation of this provision shall be cause for the

College to terminate this contract, to retain all unpaid and/or unearned monies, and to recover all monies paid. The Contractor shall notify the College in writing of any interest which any officer, employee or consultant of the College has in, or association with, any contractor, subcontractor, material supplier, consultant, or manufacturer, or other party which has any interest in this project.

25. **CONFLICT OF INTEREST:** a. No vendor shall pay, offer to pay, or agree to pay, either directly or indirectly, any fee, commission, compensation, gift, gratuity, or other thing of value of any kind to any State officer or employee or special State officer or employee, as defined by N.J.S.A. 52:13D-13b. and e., in the Department of the Treasury or any other agency with which such vendor transacts or offers or proposes to transact business, or to any member of the immediate family, as defined by N.J.S.A. 52:13D-13i., of any such officer or employee, or any partnership, firm, or corporation with which they are employed or associated, or in which such officer or employee has an interest within the meaning of N.J.S.A. 52:13D-13g.

b. The solicitation of any fee, commission, compensation, gift, gratuity or other thing of value by any State officer or employee or special State officer or employee from any State vendor shall be reported in writing forthwith by the vendor to the Attorney General and the Executive Commission on Ethical Standards.

c. No vendor may, directly or indirectly, undertake any private business, commercial or entrepreneurial relationship with, whether or not pursuant to employment, contract or other agreement, express or implied, or sell any interest in such vendor to, any State officer or employee or special State officer or employee having any duties or responsibilities in connection with the purchase, acquisition or sale of any property or services by or to any State agency or any instrumentality thereof, or with any person, firm or entity with which he is employed or associated or in which he has an interest within the meaning of N.J.S.A. 52:13D-13g. Any relationships subject to this provision shall be reported in writing forthwith to the Executive Commission on Ethical Standards, which may grant a waiver of this restriction upon application of the State officer or employee or special State officer or employee upon a finding that the present or proposed relationship does not present the potential, actuality or appearance of a conflict of interest.

d. No vendor shall influence, or attempt to influence or cause to be influenced, any State officer or employee or special State officer or employee in his official capacity in any manner which might tend to impair the objectivity or independence of judgment of said officer or employee.

e. No vendor shall cause or influence, or attempt to cause or influence, any State officer or employee or special State officer or employee to use, or attempt to use, his official position to secure unwarranted privileges or advantages for the vendor or any other person.

f. The provisions cited above in paragraph 3a. through 3e. shall not be construed to prohibit a State officer or employee or special State officer or employee from receiving gifts from or contracting with vendors under the same terms and conditions as are offered or made available to members of the general public subject to any guidelines the Executive Commission on Ethical Standards may promulgate under paragraph 3c.

26. **SET-OFF FOR STATE TAX NOTICE:** Pursuant to N.J.S.A. 54:49-19, and notwithstanding any other provision of law to the contrary, Whenever any taxpayer under contract to provide goods or services to the State of New Jersey or its agencies or instrumentalities, and including the legislative and judicial branches of State government, or under contract for construction projects of the State of New Jersey or its agencies or instrumentalities, and including the legislative and judicial branches of State government, is entitled to payment for the goods or services or on that construction project and at the same time the taxpayer is indebted for any State tax, the Director of the Division of Taxation shall seek to set off so much of that payment as shall be necessary to satisfy the indebtedness. The director,

in consultation with the Director of the Division of Budget and Accounting in the Department of the Treasury, shall establish procedures and methods to effect a set-off. The director shall give notice of the set-off to the taxpayer, the provider of goods or services or the contractor or subcontractor of construction projects and provide an opportunity for a hearing within 30 days of such notice under the procedures for protests established under R.S.54:49-18, but no request for conference, protest, or subsequent appeal to the Tax Court from any protest under this section shall stay the collection of the indebtedness. No payment shall be made to the taxpayer, the provider of goods or services or the contractor or subcontractor of construction projects pending resolution of the indebtedness. Interest that may be payable by the State pursuant to P.L.1987, c.184 (C.52:32-32 et seq.), to the taxpayer, the provider of goods and services or the contractor or subcontractor of construction projects shall be stayed.

THE COLLEGE OF NEW JERSEY

By_____
William Rudeau, Director of Construction

Date_____

By_____
Curt Heuring, Vice President of Administration

Date_____

By_____
Lloyd Ricketts, Treasurer

Date_____

By_____
Mark Mehler, Executive Director of Procurement and Fiscal Planning

Date_____

CONTRACTOR:

By_____

Title_____

Date_____

THE COLLEGE OF NEW JERSEY

December 2007

GENERAL CONDITIONS
OF THE
CONTRACT FOR CONSTRUCTION

TABLE OF CONTENTS

ARTICLE 1. CONTRACT DOCUMENTS, INTERPRETATION, INFORMATION FOR BIDDERS, CLAIMS BASED ON BID AND CONTRACT DOCUMENTS 1

A. Definitions 1
B. Intent of Contract Documents 2
C. Interpretation of Contract Documents 2
D. Law and Referenced Standards. 2
E. Plans and Specifications 3
F. Order of Precedence of Contract Documents. 3
G. Organization of Plans and Specifications 3
H. Required Approvals 3
I. Conformity of Work to Contract Documents. 3
J. Work Involving Existing Structures. 4
K Verification of Dimensions. 4
L. Manufacturer Literature 4
M. Quality -- General Requirement. 4
N. Examination of Contract Documents Before Bidding/Errors, etc. 4
O. Site Information 4
P. Sufficiency of Documents Provided for Bidding. 5
Q. Examination of Site Before Bidding. 5
R. Hazardous Materials On Site. 5
S. Limitation on Claims Based on Contract Documents and Information Provided for Bidding. 5

ARTICLE 2. THE COLLEGE. 5

A. General Rights and Responsibilities of the College. 5
B. College Representative, Authority to Decide Contract Questions 6
C. Required Approvals. 6
D. Information Required from College. 6
E. Permits, Responsibility for. 6
F. College Inspection of the Project. 7
G. College Inspectors, Duties and Limitations. 7
H. College Rejection of Defective Work 7

ARTICLE 3. ARCHITECT. 8

A. Architect's General Role 8
B. Architect's Access and Facilities. 8
C. Limitation of Architect's Responsibilities 8
D. Architect Rejection of Work. 8
E. Architect Review of Contractor Submittals. 8
F. Architect Review of Contractor As-Built Plans 8
G. Architect Determination of Satisfactory Completion 9

ARTICLE 4. CONTRACTOR. 9

A. Contractor Responsibility for Performance of the Contract and Work 9
B. Contractor Key Personnel 9
C. Contractor Supervision of Contract Work/Superintendent. 9
D. Cooperation with College and Other Contractors. 9
E. Performance of College Directives 10

ARTICLE 5. PERFORMANCE OF WORK 10

A. Protection of Work/Materials, etc. 10
B. Safety and Safety Programs. 11
C. Working Hours. 11
D. Site Security. 11
E. Site Use 11
F. Submittals (Shop Drawings, Product Data, Samples) 11
G. Layout and Dimensional Control. 11
H. Construction Access, Roads, Walks, and Parking 12
I. Construction Site Condition, Storage, Dust Control. 12
J. Photographs. 12
K. Project Sign. 13
L. Soil Conservation 13
M. Temporary Facilities, Services, Electric, Heat and Enclosures. 13
N. Substitutions (To Be Included in Bid). 13
O. License Fees. 14

ARTICLE 6. SUBCONTRACTORS 14

A. Contractor Responsibility for Subcontracted Work 14
B. Subcontractor Identification and Approval. 14
C. Subcontractor Qualifications 15
D. Subcontractor Compliance with Contract/Subcontractor Supervisors 15
E. No Contract Relationship Between College and Subcontractors. 15

ARTICLE 7. TIME, LIQUIDATED DAMAGES, DELAY CLAIMS AGAINST COLLEGE 15

A. Contract Times 15
B. Liquidated Damages For Delay. 15
C. Delay Claims Against The College 16
D. Mediation 16

ARTICLE 8.PROJECT SCHEDULE 16

A. General Schedule Requirements 16
B. Form and Content of Schedule 16
C. Computerization of Schedule 17
D. Weather Inclusion in Schedule. 18
E. Schedule Updates 18
F. Meetings/Eight Week Bar Charts 18
G. Schedule Documentation for Contract Payments 19
H. Progress, and Recovery Schedules 19
I. Contractor Failure to Provide Schedule Updates 19
J. Scheduler Qualifications. 19

ARTICLE 9. EXTENSIONS, COMPENSATION FOR CERTAIN EXTENSIONS 19

A. Delays Warranting Extensions of Contract Dates 19
B. Weather Delays. 20
C. Float Time Use 20
D. Calculation of Extensions 20
E. Elimination of Delays and Extensions (Acceleration) 20

F. Requests for Extensions Required 21
G. Compensation for Certain Extensions and Limitations 21

ARTICLE 10. PAYMENTS TO CONTRACTOR..... 21

A. Monthly Progress Payments. 21
B. Unit Schedule Breakdown/CPM Activity Price Breakdown. 22
C. Invoices for Monthly Progress Payments: Form and Content. 22
D. Payment for Materials and Equipment Procured But Not Installed. 23
E. Retainage ..... .23
F. Payment For Change Order Work. 24
G. Final Payment 24
H. Payment Terms. 24
I. Payment Based on Partial Acceptance (Limitation). 24
J. Failure to Pay Amounts in Dispute Not to Affect Performance 24
K. Waiver of Certain Claims by College Against Contractor in Connection with Final Payment. 24

ARTICLE 11. CHANGES 24

A. Changes Authorized 24
B. Change Request or Directive 25
C. Change Orders Which Are Protested. 25
D. Changes Affecting Contract Times. 25
E. Contractor Initiated Change Order Requests ..... .25
F. Change Order Amounts. 26
G. Right to Audit Extra Costs (Before and After Payment). 26
H. Change Orders with Both Price Increases and Decreases 26
I. Waiver of Rights In Connection with Change Orders Issued Without Protest. 27

ARTICLE 12. COMPLETION 27

A. Substantial Completion. 27
B. Final Completion. 28

ARTICLE 13. SUSPENSION AND TERMINATION OF CONTRACT. 28

A. Suspension. 28
B. Termination for Convenience. 29
C. Termination for Cause 29
D. Surety Takeover Following Termination for Cause. 30

ARTICLE 14. WARRANTY/DEFECTIVE WORK AND MATERIALS. 30

A. General One Year Warranty; HVAC Two Year Warranty 30
B. Defective Work, Materials and Equipment. 31

ARTICLE 15. MISCELLANEOUS. 31

A. Insurance, Bonds, Indemnification. 31
B. Prevailing Wage 31
C. Employment Discrimination. 32

D. Patents 32
E. Emergencies Affecting Safety. 32
F. Contractor Compliance with Law. 32
G. Environmental Protection - Contractor Duty to Comply with Law. 32
H. No Personal Liability of College Officials 33
I. Recovery of Monies by College from other Contracts with the Contractor. 33
J. Buy American Requirement. 33
K. Modification of Contract (Form). 33
L. State Sales Tax Exemption. 33
M. Assignment of Contract Funds and Claims Prohibited. 34
N. Independent Contractor Status. 34
O. Third Party Beneficiary Rights Not Intended 34
P. Gifts to College Employees and Agents Prohibited. 34
Q. Contractor Claims: Procedures and Limitations. 34
R. Cost Records a Condition of Receiving or Retaining Extra Compensation on Extras, Changes and Claims. 35

ARTICLE 1.CONTRACT DOCUMENTS, INTERPRETATION, INFORMATION FOR BIDDERS, CLAIMS BASED ON BID AND CONTRACT DOCUMENTS.

A. Definitions.

Definitions for the purpose of the contract include the following:

Addendum: A document issued to bidders by the College prior to the bid due date which supplements, revises or modifies the bid solicitation documents furnished for bidding purposes, and which must be identified and included in bids for the contract.

Architect: The architect (A/E) engaged by the College to design the project, to prepare the design documents and assist with bid documents, and may administer the construction contract and act as the agent of the College as described in the contract.

Bulletin: A document prepared by the architect describing proposed changes or additions to the work in the contract document which is issued after contract award. If the College decides to implement the change, it will provide the bulletin to the Contractor and ask it to submit a change order proposal or request (in accordance with the change order provision in the contract, general conditions and other sections of the bidding documents).

Change Order Proposal or Request: A written proposal or request submitted by the contractor in accordance with the change order provision of the contract, general conditions and other sections of the bidding documents, including proposals submitted in response to contract change directives which proposes cost, time and other terms under which the contractor will perform changed work under the contract. If accepted by the College, a written change order signed by the Vice President Facilities Management, Construction and Campus Safety and purchase order signed by the Contracting Officer of the College, and if accepted by the Contractor in writing, it will become part of the contract as a change order.

Contract Amendment: The contract can only be amended by (1) a written amendment identified as such which is signed by the College and the Contractor, (2) a change order signed in accordance with the contract documents, (3) a written contract change directive (CCD) issued by the College which should result in a change order unless issued to address some fault of the Contractor, (4) a written approval or acceptance by the College or the architect of a change requested by the Contractor in writing, provided the request for a change is specifically identified in a submittal.

Contract Change Directive (CCD): A contract change directive (CCD) is a written directive issued by the College which orders an addition, deletion or revision in the work, or a response to an emergency. A contract change directive does not by itself change the contract, but it should result in a change order which does change the contract price or times if warranted. A CCD should specify the terms of the change order which will result, and/or specify a deadline for the submission by the Contractor of a proper change order request, and/or contain other similar terms.

Contract Documents: The contract documents include the signed contract, the bid solicitation documents, the Contractor's bid proposal, and the contract documents listed in the contract. They include but are not limited to the general conditions, any supplemental general conditions, any addenda, plans and specifications, and change orders which are issued and approved by the College after the contract is awarded.

Contract Limit Lines: The lines shown on the contract plans which limit the boundaries of the project site, and beyond which no construction work or activities shall be performed by the Contractor unless otherwise specified in the contract documents including the plans and specifications and supplemental general conditions.

Contracting Officer: The Associate Treasurer of the College shall be the Contracting Officer in connection with the contract and the project. The Contracting Officer and other designee shall have authority to act on behalf of the College under the contract.

Field Order (FO): A written order issued by the architect or the College which requires minor changes in the work which do not result in a change in the contract price or the contract time. If the Contractor believes that a field order warrants the issuance of a change order which changes the contract times or price, it must notify the College and the architect in writing within 48 hours, and its notice must specify the terms of the change order which it believes are warranted, including specific time and price change requests.

Owner's Representative: The Owner's representative is a person or persons designated by the Owner to act on its behalf in administering the construction contract for the College. The Owner's representative may include the Director of Campus Construction, the Project Manager or an independent construction manager working for the Office of Campus Construction.

Site Superintendent: The site superintendent is a person or persons designated by the Owner to witness, observe, record and report on activities in and around the construction site. The site superintendent does not have the authority to stop or change the scope of work of the contract for construction.

Supplemental General Conditions: The part of the contract documents which amends or supplements the general conditions for the project.

B. Intent of Contract Documents.

The intent of the contract documents is to describe a functionally complete and aesthetically acceptable project to be constructed and completed by the Contractor in every detail in accordance with the contract documents. Any work, services, materials, equipment or documentation that may be reasonably inferred from the contract documents or from prevailing custom or trade usage as being required to produce a complete project shall be supplied whether or not specifically identified at no additional cost to the College. Where the contract documents describe portions of the work in general terms but not in complete detail, only the best construction practices and only materials and workmanship of the first quality are to be used. Only where the contract documents specifically describe a portion of the project as being performed by others is the contract work to be considered to include less than the entire project.

C. Interpretation of Contract Documents.

When two or more interpretations of a specification for the work are possible, the most stringent or the highest cost interpretation shall apply as determined by the Architect. The Architect (or in the absence of the Architect, the Owner) shall be the sole interpreter of the plans and specifications and the contractor's performance therewith. It is the intent of these plans and specifications to provide materials of a quality consistent with the highest standards provided under similar circumstances in the same general geographical area.

D. Law and Referenced Standards.

The Contractor is required to comply with all federal, state and local laws and regulations which apply to the project, the work and the contract. Where the contract documents refer to any publication, including but not limited to any standard, which affects any portion of the work or the project, it shall be considered to mean the edition or revision in effect on the bid due date unless otherwise specified in the contract documents. No provision in any publication including any standard shall change or affect the duties and responsibilities of the College, the Architect or the Contractor. Nor shall they create an obligation on the part of the College or the Architect to supervise or direct the Contractor's work.

E. Plans and Specifications.

The plans will include general plans and such details as deemed necessary to give a comprehensive representation of the construction required. The Contractor shall keep one set of plans available at the project site which shall be available for inspection by the College and the Architect at all times. All alterations affecting the requirements in the plans must be authorized in writing, and shall be promptly noted on the Contractor's record set of plans which are maintained at the site for inspection by the Contractor, the College and the Architect

F. Order of Precedence of Contract Documents.

Each of the contract documents is an essential part of the contract, and a requirement specified in one part of the documents is binding as if specified in all. The contract documents are intended to be complementary and to describe and provide for a complete project. If there is any conflict among the contract documents, the signed contract and all approved change orders shall control. As to the other contract documents, the order of the precedence shall be as follows:

(a) Contract
(b) Addenda
(c) Supplemental General Conditions
(d) General Conditions
(e) Specifications
(f) Plans
  i. Notes
  ii. Large Scale Details
  iii. Sections
  iv. Elevations
  v. Plans
(g) Scope of Work Description

G. Organization of Plans and Specifications.

The arrangement of the plans and the organization of the specifications into divisions, sections or articles shall not be construed by the Contractor as being intended to divide or allocate the work among subcontractors or trades or to establish the scope of the work to be performed by particular subcontractors or trades. The Owner is not liable for the Contractor dividing and separating the contract documents into individual packages to sub-contractors and therefore contract items not being figured for by the contractor accordingly. The contract documents work together as a whole, and therefore the contractor is required to coordinate the entire package with all its sub contractors.

H. Required Approvals.

In all cases where approvals or decisions under the contract documents are required from the College, the work shall not proceed without the required approvals and decisions in writing.

I. Conformity of Work to Contract Documents.

All work performed shall conform to the lines, grades, cross-sections, dimensions, material requirements, tolerances, details and other information in the contract documents. The purpose of tolerances is to accommodate occasional minor variations from the middle portion of the tolerance range which are unavoidable despite reasonable construction practices. When a maximum or minimum tolerance value is specified, the material and the work shall be controlled so that they shall not be preponderantly of borderline quality or dimension.

J. Work Involving Existing Structures.

On projects involving alterations, remodeling, repairs, installations or other work in pre-existing structures or systems, the Contractor shall by personal inspection of the existing structures and systems satisfy itself as to the accuracy of any information provided which may affect the quantity, size and/or quality of materials required for a satisfactorily completed contract and project, including information which is not identified or included in the plans and specifications. The Contractor shall provide all material and labor required to complete the work and contract based on conditions which can be reasonably observed by a competent and diligent contractor before bidding.

K. Verification of Dimensions.

The Contractor shall verify all dimensions at the job site and shall take any and all measurements necessary to verify the information in the plans. The Contractor shall properly and accurately layout and survey the work. Any errors or discrepancies affecting the layout of the work shall be reported to the Architect and the College immediately in writing. No work affected by any error or discrepancy shall proceed until such discrepancy is resolved by a written decision of the Architect with the consent of the College.

L. Manufacturer Literature.

Manufactured articles, materials and equipment shall be installed, applied, connected, erected, used, cleaned and conditioned in accordance with the manufacturer's written instructions unless otherwise specified in the contract documents. If there is any conflict between manufacturer literature and the contract documents, it shall be reported by the Contractor to the Architect and the College in writing, and the Contractor shall not proceed without a written decision by the Architect with the consent of the College.

M. Quality -- General Requirement.

Where no explicit quality or standard are specified for work, materials or equipment, they shall be new, of good quality, free of defects, suitable for their intended use, in conformity with the contract documents, and consistent with the highest quality of the surrounding work and of the construction of the project generally.

N. Examination of Contract Documents Before Bidding/Errors, etc.

The Contractor represents and warrants that before bidding it examined and carefully studied the contract documents and other documents included or referred to in the bid documents. The Contractor also represents and warrants that the documents are sufficient for bidding and performing the contract work at the contract price. Should it appear that any of the work or materials are not sufficiently or properly detailed or explained in the contract documents, the Contractor shall notify the College in writing before the bid deadline for submitting questions.

Errors, omissions, conflicts, discrepancies, inconsistencies or other defects in the contract documents or between the contract documents and any codes, standards or other applicable documents which are capable of being discovered by a diligent and competent contractor before bidding shall be reported to the College in writing before the bid deadline for submitting questions. If errors, omissions, inconsistencies or other defects in the contract documents are not discovered until after the bid due date, the Contractor shall promptly notify the College and the Architect of them, provide written recommendations regarding changes or corrections to resolve any such errors, omissions, inconsistencies or defects, and obtain the Architect's written interpretation and approval before proceeding with the work affected.

O. Site Information.

Soil borings, test pits or other subsurface or site information regarding the physical site and subsurface conditions on or near the site may have been obtained from independent contractors for the purpose of preparing the design documents for the project rather than for the purpose of contractor estimating or bidding. Such information may be identified or included in the contract documents so that it can be reviewed by bidders during the bidding phase, but

because of the limited nature and purpose of the information, it shall not be considered to be part of the contract documents, and the Contractor must assume responsibility for interpreting and relying upon the information.

P. Sufficiency of Documents Provided for Bidding.

The Contractor represents and warrants that before bidding it carefully studied all reports, surveys and documents included or identified in the bid documents regarding observations, inspections, investigations and tests of the site and subsurface conditions at or near to the site, and all information provided to bidders regarding physical conditions at or near the site, including surface and subsurface composition, water, structures and utilities, and that it determined that no further examinations, investigations, tests, studies or data were necessary for bidding or the performance of the contract work at the contract price. If the Contractor concluded that additional information is required, it must notify the College in writing before the bid deadline for submitting questions.

Q. Examination of Site Before Bidding.

The Contractor represents and warrants that before bidding it visited the site and familiarized itself with and was satisfied as to the general, local and site conditions which may affect the cost, progress and performance of the work and the contract, and that its bid and bid price take into account all such conditions. No additional costs will be borne by the Owner for conditions that existed and were reasonably observable or described at the time of bidding.

R. Hazardous Materials On Site.

The Contractor will not be responsible for hazardous environmental conditions uncovered or discovered on the site which were not disclosed in the contract documents. If such conditions are discovered, the Contractor shall stop work and notify the College in writing immediately. The College may issue a written directive to the Contractor requiring it to stop work until the hazardous environmental condition is remedied, and the Contractor will be entitled to an extension of the contract times if an extension is warranted under the provisions of the contract and the general conditions regarding extensions. The College may also make changes in the contract in response to the conditions, and the contract will be changed in accordance with the change order provisions in the contract and the general conditions.

S. Limitation on Claims Based on Contract Documents and Information Provided for Bidding.

The Contractor may not assert claims for extra compensation beyond the bid and contract price for constructing the completed project by reason of any errors, omissions, inconsistencies, or defects in the contract documents which are discoverable by a diligent and competent contractor, because of its obligation to review and study the bid documents before submitting its bid, and because of its obligation to notify the College in writing before submitting its bid of errors, omissions, inconsistencies, and defects in the documents. This limitation on claims may be modified and further restricted in the signed contract when the contract requires the Contractor to participate in any aspect of the design phase.

The Contractor may assert claims for extensions and additional compensation in accordance with the contract and general conditions if information regarding the site which is identified in the bid or contract documents is factually inaccurate, and the inaccuracy is one which a reasonably competent and diligent contractor would not discover in preparing a bid. The Contractor may not assert a claim for an extension or extra compensation when it claims, not that the information is factually inaccurate, but rather that conclusions, inferences or judgments made in reliance on accurate information prove to be incorrect.

ARTICLE 2. THE COLLEGE.

A. General Rights and Responsibilities of the College.

The College as the owner of the project is entitled to have the Contractor perform and complete the contract work in accordance with the contract documents, including the time of completion, quality and documentation requirements of the contract. The College for its part undertakes to furnish the site, to notify the Contractor of any restrictions on the site which could affect the Contractor's performance of the contract, to obtain approvals relating to the

site which are needed for the construction to proceed, to pay the Contractor in accordance with the contract, and to act reasonably in reviewing all documentation, claims and questions properly submitted to it under the contract. The College also undertakes to provide the information and items which it expressly agrees in the contract documents to provide.

The College shall also have such other rights and responsibilities as are specified in the contract documents. The College will not supervise the Contractor's work or be responsible for the Contractor's construction means and methods, or the contractor's safety practices, or any failure of the Contractor to comply with the contract or any laws or regulations.

B. College Representative, Authority to Decide Contract Questions.

The Contracting Officer delegates its authority to the Owner's representative who is authorized to act and make decisions on behalf of the College regarding matters specified in the contract documents. However, the Owner's representative is not authorized to make or agree to changes to the contract involving time, contract price or material changes.

All changes to the contract including change orders that modify contract price, contract time or other material change to the contract must be reviewed and approved by the Contracting Officer or his/her designee. The contracting officer designates that the Vice President for Facilities Management, Construction and Campus Safety is authorized to approve change orders.

The Owner's representative, in consultation with the Architect, is authorized to decide on behalf of the College all questions regarding the quality, acceptability and rate of progress of the work, all questions regarding the interpretation of the contract documents, all questions regarding the acceptability of the performance of the contract by the Contractor, and all questions regarding the compensation due to the Contractor. Where the Owner's representative is authorized to render decisions under the contract regarding disputes or claims, he/she shall consult with the Architect and shall not act arbitrarily so as to unfairly benefit either the College or the Contractor.

C. Required Approvals.

In all cases where approvals or decisions are required from the College under the contract documents, such approvals or decisions shall be made reasonably, except in cases where a specific standard applies such as, for example, situations where the College is entitled to exercise unqualified discretion in selecting the types of materials, products or construction which it decides to procure.

D. Information Required from College.

Information which the contract documents specify the College will provide shall be provided with reasonable promptness.

E. Permits, Responsibility for.

The College will arrange and pay for permits and permit inspections, including building code permits except to the extent that the specifications specify otherwise. The Contractor will arrange for and coordinate all inspections and the dates and times for all inspections with local, state and independent agencies and include the Owner's representative or the site superintendent.

F. College Inspection of the Project.

The College shall have the right to be represented at the site by the Owner's representative(s), the site superintendent and other College employees designated by the College, the project architect, and other consultants designated by the College or the architect. They shall have the right to visit the site, inspect work and materials, inspect project documentation, conduct tests, attend meetings, meet with Contractor and subcontractor representatives, investigate problems, conduct studies, and make reports. They shall be allowed access to all parts of the work, and the Contractor shall furnish them with information and assistance when they request it.

The Contractor shall give the College and the architect timely notice of readiness of work for observation, inspection and testing, and shall cooperate with these efforts. The Contractor shall also comply with any inspection and testing procedures specified in the contract documents.

The Contracting Officer, the Architect and the Owner's representative shall have the right to direct the Contractor to remove or uncover unfinished work if deemed necessary to inspect work or materials in place.

If work is covered before it is inspected because the College, the architect or any consultant were not afforded a reasonable notice and opportunity to inspect, or where the contract documents or any law require an inspection, the Contractor shall uncover and replace work at its own expense if required to do so by the College.

If any other portion of the work not specifically required to be inspected is covered, and the College or the architect did not ask to observe or inspect the work before it was covered, the College may nonetheless ask to inspect the work. If the College does so, the Contractor shall uncover the work for inspection. If the work uncovered is found to be in accordance with the contract documents, the cost of uncovering and replacement shall be paid by the College by a change order. If the work uncovered is found not be to in compliance with the contract documents, the Contractor shall pay all costs of uncovering and replacement, and also remedy the defect or deficiency at its own cost.

The College at all times retains the right to stop all or part of the work by a written direction because of defective work until the defect is eliminated. This right shall not give rise to any duty on the part of the College to exercise the right for the benefit of the Contractor or those performing its contract.

G. College Inspectors, Duties and Limitations.

If the College designates inspectors to inspect work and materials and project documentation, they will not be authorized to alter or waive any requirements or provisions in the contract documents. The College's inspectors will not be authorized to issue instructions contrary to the contract documents or to act as foremen or employees of the Contractor. College inspectors will have the authority to reject unsuitable work or materials, subject to written confirmation by the Owner's representative. If the Contractor believes that any action of a College inspector is contrary to the contract documents, it shall notify the Owner's representative and the Architect in writing within 48 hours. The College does not undertake to have inspectors sufficient in number to inspect every item of work or material as it is provided, or to have inspectors with the expertise needed to judge every aspect of the work.

The Contractor shall remain responsible for defective work or materials irrespective of any inspections or lack of inspections during the work. If the Contractor seeks a binding determination of the acceptability of work or materials during the performance of the contract, it shall do so by making a written request for such a determination to the Owner's Representative with a copy to the Architect.

H. College Rejection of Defective Work.

The College shall have the right to reject defective work, materials, or equipment at any time, and to require the Contractor to remove and replace it at the Contractor's expense. The Contractor shall also be responsible for repairing damage to other work caused by defects or deficiencies in its work. The Owner's representative, upon consultation with the Architect may elect to accept work or materials which do not conform to the contract and to credit or reduce the

contract price, but the College shall have no contractual obligation to elect this remedy. Changes to the contract in these circumstances must be recorded via regular change order process.

ARTICLE 3. ARCHITECT

A. Architect's General Role.

The project architect is by contract with the College responsible for the design of the project. During construction, the architect is responsible for reviewing Contractor submittals to determine if they conform to the contract documents and good industry practice, to provide some level of inspection to determine if work and materials provided conform to the contract documents and good industry practice, and to review Contractor payment applications. During the performance of the work the architect may investigate any defects and deficiencies in the work or materials provided, and make recommendations to the College regarding the defects or deficiencies. The architect will conduct inspections to determine if the Contractor has achieved proper substantial and final completion and submitted all documents required at completion. The Contractor shall cooperate with and render assistance to the architect in the performance of these duties.

B. Architect's Access and Facilities.

The Contractor shall allow the architect and its consultants access to the project at all times, and shall facilitate their access to inspect work and materials and project documentation. The architect and its consultants shall be permitted to attend job meetings, scheduling meetings and other meetings at the site, and the Contractor shall facilitate their ability to do so. The Contractor shall provide an office at the site for the project architect if the specifications require it to do so.

C. Limitation of Architect's Responsibilities.

The architect will not be responsible for or have control of construction means and methods, or safety precautions and programs in connection with the work. The architect will not be responsible for or have control of acts or omissions of the Contractor, its subcontractors, or any of their agents or employees, or any other person performing any of the contract work.

D. Architect Rejection of Work.

The architect may recommend rejection of work or materials which it believes do not conform to the contract documents. Whenever the architect considers it necessary or advisable, it may recommend to the College special inspections or testing of work or materials, including completed work and materials.

E. Architect Review of Contractor Submittals.

The architect will review, approve or take other appropriate action regarding Contractor submittals, such as shop drawings, product data and samples, to assure that they conform with the design requirements and contract documents. The approval of a specific item shall not normally be deemed to constitute approval of an assembly of which the item is a component.

F. Architect Review of Contractor As-Built Plans.

The architect will periodically review the Contractors' as-built plans maintained at the site to ensure that they are up-to-date, and shall review the completed as-built plans at project completion to ensure that they are complete and are provided to the College.

G. Architect Determination of Satisfactory Completion.

The architect will conduct inspections to determine the dates of substantial and final completion and to determine if the Contractor has properly substantially and finally completed the project. The architect will obtain from the contractor all written warranties and all other documents which the Contractor is required to provide at the time of the project completion. The architect will make a recommendation to the College regarding final project and final contract acceptance.

ARTICLE 4. CONTRACTOR.

A. Contractor Responsibility for Performance of the Contract and Work.

The Contractor shall perform all of the duties in the contract documents, shall furnish the labor, materials and equipment to complete the construction of the project in accordance with the contract, and furnish all services, labor, materials and equipment necessary or appropriate to construct the project. The Contractor shall manage, supervise, schedule, direct, and inspect the work as competently, skillfully, and efficiently as possible, and shall be solely responsible for all construction means, methods, techniques, safety, security, sequences, procedures, and coordination.

The Contractor shall comply with all applicable laws, and shall establish and maintain reasonable quality assurance and safety programs in connection with its work. The Contractor shall complete the contract in compliance with the contract documents and by milestone, substantial completion and final completion dates in the contract or any authorized extensions thereof. The Contractor shall maintain good order and discipline at the site at all times.

B. Contractor Key Personnel.

The Contractor shall assign to the project a project executive, project manager, superintendent, and scheduler, and such other key personnel as are specified in the contract or as required to carry out the requirements of the project. The College has the authority to reject and have replaced any staff member of the contractor or subcontractors for any reason.

C. Contractor Supervision of Contract Work/Superintendent.

The Contractor shall supervise and be responsible for the acts and omissions of the Contractor's employees, agents, subcontractors, sub-subcontractors, suppliers and other persons performing portions of the work and the contract. The Contractor's designated project superintendent shall be at the project site at all times when work is in progress. The Contractor may designate in writing an alternate superintendent which must be approved by the College. The superintendent (or alternate) shall have full authority to represent and act for the Contractor at the site, and shall have full authority to execute orders and directives of the College without delay.

Communications to the superintendent shall be deemed to have been given to the Contractor. The superintendent shall be capable of and authorized to respond to all hazardous and unsafe conditions at the project site and to implement prompt corrective measures to eliminate all unsanitary, hazardous or dangerous conditions at the site. The College may suspend all or part of the work at the project site if the superintendent or alternate is not present at the project site, and such suspensions shall not be the basis of a claim against the College.

The superintendent shall attend all meetings at the project site including job meetings, scheduling meetings, and meetings with the College and/or the architects. The superintendent shall have a written plan which must be approved by the College for responding to emergencies when the work is not in progress. The Contractor shall also utilize qualified competent craftsmen on the project.

D. Cooperation with College and Other Contractors.

The College reserves the right to contract for and perform other or additional work on or adjacent to the project site. When separate contracts are let within the limits of the project site, or in areas adjacent to the site, the Contractor shall perform its work so as not to interfere with or hinder the progress or completion of the work being performed by other contractors. The Contractor shall also affirmatively cooperate with such other contractors and coordinate its activities with theirs, and include coordination measures in the project CPM construction schedule. The Contractor shall arrange its work and shall place and dispose of materials being used so as not to interfere with the operation of other contractors within the limits of the project site. The Contractor shall join its work with that of the other contractors in an acceptable manner and shall perform the work in proper sequence with that of other contractors.

If there is a disagreement as to the respective rights of the Contractor and others doing work within the limits of or adjacent to the project site, the College shall determine the respective rights of the contractors involved to secure the satisfactory completion of all affected work. The Contractor shall not be entitled to additional compensation beyond its contract price which may arise because of inconvenience, delay, or loss experienced by it as a result of the presence and operations of other contractors working within the limits of or adjacent to the project site.

The Owner reserves the right to occupy any portion of the Project which is ready for occupancy prior to completion and acceptance of the Project, after Local and State Construction Enforcing Agency approval.

The occupancy of any portion of the Project does not constitute an acceptance of any work nor does it waive the Owner's right to liquidated damages or constitute an acceptance of any work as the Project will be accepted as a whole and not in units. Prior to such occupancy, however, the Architect, a representative of the Owner, and the Contractor shall fully inspect the portions of the Project to be occupied, preparing a complete list of omissions of materials, faulty workmanship, or any items to be repaired, torn out or replaced. The Owner will assume responsibility for damage to premises so occupied of any items not on this list when such damage is due to greater than normal wear and tear, but does not assume responsibility for improper or defective workmanship or materials.

E. Performance of College Directives.

When the College issues a written directive to the Contractor under the authority of any provision in the contract or general conditions, the Contractor shall perform as directed in a diligent manner and without delay. Compliance with written directives shall not adversely affect the rights of the Contractor under the contract or law, but if the Contractor objects to a directive of the College, or claims that a directive infringes upon its rights or entitles it to a change order, it shall notify the College in writing within 2 business days of any directive and describe any objection it has to the directive and the reasons for its objection. Objection to a written directive does not relieve the contractor of the obligation to comply with the directive and proceed in a diligent manner to implement the directive without delay.

ARTICLE 5. PERFORMANCE OF WORK

A. Protection of Work/Materials, etc.

The Contractor, shall at its own expense, protect all finished work and materials from damage and keep them protected until the project is accepted as substantially completed, and shall repair or replace any work or material damaged before acceptance. After the project is accepted as substantially complete, the Contractor will remain responsible up through final completion for damage to work and materials caused by it or its subcontractors or others participating in the performance of its contract obligations. The Contractor shall also secure and protect its own tools, equipment, materials and supplies, and the College shall have no liability for damage, theft or injury to the Contractor's property.

B. Safety and Safety Programs.

The Contractor shall have full responsibility for safety at the project site at all times up to final completion and acceptance of the project and the contract. The Contractor shall provide for the safety of all individuals on the project site, and take measures to ensure that individuals on or near the project site are not injured by the performance of the contract. The Contractor shall establish and maintain a project safety program in accordance with all applicable laws including OSHA, good industry practice, and any additional requirements in the contract documents. If the College or the Architect become aware of an unsafe situation, the Contractor will immediately respond to remedy the safety concern.

C. Working Hours.

Except as required for the safety or protection of persons or property, or as specified in the contract documents, all work at the site shall be performed during regular working hours, and not on Saturdays, Sundays, or legal holidays without the prior written consent of the College which will not be unreasonably withheld.

D. Site Security.

The Contractor shall provide, maintain and oversee security at the site if required in the specifications. The project site shall be fenced as specified in the specifications, and the Contractor shall control access when gates are unlocked or open.

E. Site Use.

The Contractor shall confine construction equipment, storage and work to the project site absent written approval from the College. Any request by the Contractor to use areas outside the project site must be described in written form and included with the Contractor's bid.

F. Submittals (Shop Drawings, Product Data, Samples).

The Contractor shall submit to the architect with reasonable promptness a schedule for all submittals, including shop drawings, product data and samples required by the contract documents. Submittals shall be complete as to quantities, details, dimensions and design criteria. The architect and the College will approve submittals if they conform to the contract documents, the design concept and good industry practice. The Contractor shall note its approval of all submittals and the date for any submittals prepared by any subcontractor or supplier, and it shall be responsible for determining and verifying all materials, field dimensions, field construction criteria, and coordination requirements pertaining to the submittal.

The Contractor will not be relieved of responsibility of deviations in submittals from the requirements in the contract documents by reason of approvals of the submittals unless the Contractor specifically identifies the deviation in the submittal and the architect and the College specifically and expressly approve the deviation. The Contractor shall be responsible for errors or omission in its submittals. No work or materials included in a submittal shall begin until the submittal is approved by the architect and the College.

G. Layout and Dimensional Control.

The Contractor shall be responsible for locating and laying out the project components and all of the project parts on the project site in strict accordance with the plans, and shall accurately establish and maintain dimensional control. The Contractor shall employ a competent and licensed New Jersey engineer or land surveyor as appropriate to perform all layout work and to fix the level and location of excavations, footing base plates, columns, walls, floors and roof lines. The Contractor shall furnish to the College and the architect certifications that each such level is as required by the plans as the work progresses.

The plumb lines of vertical surfaces shall be tested and certified by the Contractor's engineer or surveyor as the work proceeds. The engineer or surveyor shall establish all points, lines, elevations, grades and bench marks for the proper control and execution of the work. The engineer or surveyor shall establish a single permanent benchmark to be approved by the architect, to which all three coordinates of dimensional control can and shall be based. The engineer or surveyor shall verify all College-furnished topographical and utility survey data, and all points, lines, elevations, grades and benchmarks provided.

Should any discrepancies be found between information in the plans and the actual site or field conditions, the Contractor shall notify the architect and the College in writing, and shall not proceed with any work affected until it receives written instructions from the College.

The contractor is required to provide a final "as built" survey from a New Jersey Licensed/Certified Surveyor of the project site showing all structures, elevations, grades and required information on the project site and submit to the College in CADD format.

H. Construction Access, Roads, Walks, and Parking.

The Contractor shall construct and keep all roadways, drives, walkways and parking areas within or near the site free and clear of debris, gravel, mud or any other site materials, including, for example, by the cleaning of muddy wheels and undercarriages on vehicles before they exit the site. The Contractor shall be responsible for any citations, fines, or penalties imposed on it or the College for failing to comply with applicable local rules or laws regarding its use of roads and the like.

The Contractor shall obtain permission in writing from the College before using for construction purposes any existing driveways, parking areas, walkways or areas not specifically designated for such use in the contract documents. The Contractor shall maintain such driveways and areas in good and clean condition during construction and not damage them. At final acceptance and completion, it shall leave them in the same condition as they were at the start of the work. Conditions of such facilities before use shall be photographed and otherwise documented by the Contractor. The Contractor shall not commence construction of permanent driveways, parking areas or walks on the project without the written approval of the College.

Any existing walkways, driveways, aprons, or curbs damaged by the work of this contract shall be replaced in kind immediately upon project completion, or as required to maintain campus safety and campus aesthetics.

I. Construction Site Condition, Storage, Dust Control.

The Contractor shall provide reasonable, safe and orderly storage for its equipment, tools and materials, and not unreasonably encumber the site. The Contractor shall keep the site and the project free from the accumulation of refuse, debris and scrap materials caused by its operations so that the site has a neat, orderly and workman-like appearance. Loading, cartage, hauling and dumping will be at the Contractor's expense. The Contractor shall provide at its expense temporary dust-proof partitions around areas of work in existing buildings, and where reasonably required in new building areas.

J. Photographs.

The Contractor shall provide at its expense monthly progress photographs of the project. The photographs shall be 8 inches by 10 inches and shall be submitted to the College in duplicate monthly. Unless otherwise specified in the supplemental general requirements, four photographs shall be submitted each month which provide views of the project taken from the same four points each month which should be selected by the architect.

K. Project Sign.

The Contractor shall at its expense provide, erect and maintain two project signs at the site which shall be described in the contract documents. The College will specify the locations. The sign shall be painted by a professional sign painter. No other sign will be permitted at the site. The Contractor shall remove the signs when the project is finally accepted unless the College requests that it be removed earlier.

L. Soil Conservation.

The Contractor shall employ reasonable measures to conserve the soil at the site, and determine and comply with all soil conservation measures required by the Mercer County Soil Conservation District.

Contractor shall coordinate and schedule all Soil Conservation inspections and provide the College with all site inspection notes, approvals or notices.

M. Temporary Facilities, Services, Electric, Heat and Enclosures.

The Contractor shall provide storage areas, temporary drives and sidewalks, employee parking areas, staging areas, excavation borrow/spoil areas, commercial canteen areas, field offices including a meeting room, telephones, toilet facilities, and other temporary facilities which are necessary to perform the work or which may be required by the project specifications. The Contractor shall locate these facilities on the project site, and the location shall be subject to the approval of the College.

The Contractor shall provide adequate and clean temporary toilet facilities on the project site in locations to be approved by the College, and they shall be serviced at least twice a week by a firm qualified and experienced in such functions. The Contractor shall provide such temporary electricity, water, and other utilities which are necessary to perform the work, or which may be required by the project specifications. The Contractor shall also supply such temporary enclosures and heat which are necessary to perform the work or which may be required by the project specifications. The contractor and the subcontractors will not enter or use any College facilities not required by the work of the contract.

Temporary electric and heat shall be furnished by the Contractor for the benefit of other contractors working on the project if specified in the project specifications.

The Contractor shall not anticipate using the permanent heating or air conditioning system in a building for temporary heat or air conditioning prior to the acceptance of the project as substantially complete unless specified otherwise.

Any natural gas, or combustible material, or hazardous material containers utilized by the Contractor must be stored in a safe, ventilated location approved by the College. The Contractor must also submit for approval a reasonable safety plan for the operation of temporary heat equipment.

N. Substitutions (To Be Included in Bid).

The Contractor may include in their bid substitute materials or equipment or construction methods in lieu of those specified in the contract documents, but they do so at their own risk. Any substitution must be equal in type, function and quality to the item required in the contract. The Contractor must submit all information required within 20 days of contract award to determine if the proposed substitute is equal to the contract requirements, and any substitution must be approved by the architect and the College

The College shall have complete discretion to decide whether it will accept any substitution. No substitution shall result in any increase in the contract price or times. The Contractor in its application for the substitution must certify

in writing that the substitution is equal to what is specified in the contract documents in all material respects and will not increase the time or price of the contract work.

Should the substitution be rejected, the contractor will then be required to provide the specified product, material or method at no additional cost to the College and no change in the project schedule.

O. License Fees.

The Contractor shall be responsible for obtaining the right to use any equipment, design, device or material required to perform the contract, and to include in its contract price any license fee or royalty required.

ARTICLE 6. SUBCONTRACTORS.

A. Contractor Responsibility for Subcontracted Work.

The Contractor shall be fully responsible to the College for the proper performance of the contract irrespective of whether the work is performed by the Contractor's own forces or by subcontractors employed by the Contractor. The Contractor shall be responsible for the acts and omissions of its subcontractors and suppliers on the project and shall take appropriate measures if they are not properly supervising or performing their work.

B. Subcontractor Identification and Approval.

The Contractor shall include with its bid for the contract the names, addresses and license numbers of all subcontractors which it proposes to utilize on the project for plumbing and gas fitting work, HVAC work, electrical work, structural steel and ornamental iron work. No subcontractor may perform work on the project until it has been approved by the College.

Within 20 days after Notice to Proceed, the Contractor shall furnish to the College in writing for review by the Architect a list of the names of all Subcontractors, Sub-subcontractors, fabricators, manufacturers, sources of supply, articles, devices, fixtures, pieces of equipment, materials and processes proposed for each item of Work on List of Subcontractors, AIA Document G805. The Architect or Owner will promptly notify the Contractor in writing if either the Owner or Architect, after due investigation, has reasonable objection to any names on such list. Failure of the Owner and Architect to make objection within 10 days to any name on the list shall constitute acceptance of such name.

In submitting the names of subcontractors, the Contractor shall list 1) the name and address of the Subcontractor, 2) the name and address of all Sub-subcontractors for each significant subdivision of the trade or work 3) reference in the form of a list of at least 3 jobs similar in size and quality to this Project performed in the last 5 years, with name and location of work, dollar value and names of the Owner and Architect.

In submitting sources of supply of materials, articles and pieces of equipment including those under subcontracts and sub-subcontracts, the Contractor shall list 1) the name and address of the source of supply 2) the name of the manufacturer of the items.

If the College disapproves a proposed subcontractor, it will provide the reason for its decision in writing. The College will not be liable for any extra cost or delays caused by the reasonable disapproval of proposed subcontractors. The approval of subcontractors by the College shall not relieve the Contractor of the responsibility for complying with all of the provisions of the contract including those performed by the subcontractors. Subcontractors approved by the College may not be changed without prior notice to and approval by the College.

C. Subcontractor Qualifications.

The College may disapprove a proposed subcontractor if it has a reasonable objection to the subcontractor, or if there is evidence of poor performance on other projects or financial problems, or if the subcontractor has been suspended or debarred by any public agency within the State of New Jersey, or if the subcontractor is not properly licensed and registered to do business in New Jersey or with the New Jersey Department of Labor regarding prevailing wages, or if the subcontractor has been charged with or convicted of violating any laws including but not limited to the New Jersey Prevailing Wage Act, criminal laws, public procurement laws, anti-trust laws, election laws, laws against employment discrimination, environmental laws, tax laws, professional licensing laws, or laws regarding attempts to improperly influence College or other public officials. Subcontractors shall also utilize qualified, competent craftsmen on the project.

D. Subcontractor Compliance with Contract/Subcontractor Supervisors.

The Contractor shall require its subcontractors on the project to comply with all pertinent terms of the contract and contract documents, and shall include all appropriate terms and provisions in subcontracts on the project to achieve proper contract performance. Each subcontractor shall have competent superintendents and foremen supervising their work, and the Contractor shall take appropriate measures if they do not do so.

E. No Contract Relationship Between College and Subcontractors.

Nothing in the contract or contract documents shall create any contractual relationship or duties between the Contractor's subcontractors and the College.

ARTICLE 7. TIME, LIQUIDATED DAMAGES, DELAY CLAIMS AGAINST COLLEGE.

A. Contract Times.

The Contractor shall begin the contract work within 10 days after the issuance of a notice to proceed by the College, and shall perform the work in the contract by the dates specified in the contract, including milestone, substantial completion and final completion dates.

B. Liquidated Damages For Delay.

If the Contractor fails to substantially complete the project by the substantial completion date specified, the Contractor shall pay the amounts specified in the contract as liquidated damages for delay for each calendar day that the task remains incomplete beyond the substantial completion date.

The College and the Contractor agree that the actual loss to the College from construction delays and the inability to use the project in a substantially completed state are for the most part difficult to quantify, and that the foregoing liquidated damages formula results in damages amounts that are reasonable and are not penalties. The College and the Contractor agree that the amount of liquidated damages per calendar day for delays in the substantial completion of the project is a reasonable estimate of the damage to the College for not being able to use the project in a substantially completed state. The College may deduct liquidated damages from payments due under this contract, but its failure to withhold liquidated damages or to assert claims for liquidated damages shall not be deemed a waiver of the College's right to withhold or to assert claims for damages for any delays which occur at any time on the project.

C. Delay Claims Against The College -- Limitations

The Contractor may not assert claims against the College for extra compensation by reason of any delays in its work resulting from acts or omissions of any third parties irrespective of extensions granted under the contract, including but not limited to delays caused by third parties such as the project architect, other contractors, utilities and governmental authorities.

The College shall only be required to pay additional compensation for delays caused by the College itself, and only to the extend required by N.J.S.A. 2A:58B-3 (delayed performance caused by the College's own negligence, bad faith, active interference or other tortuous conduct, but not for reasons contemplated by the parties and not for the negligence of others including others under contract with the College on the theory that such negligence should be imputed to the College). The College shall not be liable for any period of delay when there is a concurrent delay for which it is not responsible.

When the Contractor is entitled to extra compensation for delay under the contract and general conditions, it can only assert claims for extra costs at the job site, and may not assert claims for extra costs for home office expenses, home office overhead, lost profit or consequential losses. Any additional compensation under this paragraph shall also be subject to the provisions in the contract and general conditions regarding claims, and the provisions in the contract and general conditions regarding the maintenance and availability of cost records.

D. MEDIATION

If a dispute or claim arises out of or relates to this contract, or the breach thereof, and if the dispute cannot be settled through negotiation, the parties agree first to try in good faith to settle the dispute by mediation administered by the American Arbitration Association under its Construction Industry Mediation Rules before resorting to arbitration or litigation. The Owner reserves the right to request a mediation if it deems it necessary.

ARTICLE 8. PROJECT SCHEDULE.

A. General Schedule Requirements.

The Contractor shall schedule the construction work and determine the most feasible means and order for the work to complete the project within the times required by the contract. The Contractor shall prepare a project schedule and monthly schedule updates which must be approved by the College and the architect, and it shall perform the contract and the work in accordance with the schedule. The project schedule should include a schedule of submittals for approval. The project schedule must be submitted before any work (other than mobilization to site and general layout and site preparatory work) on the project can begin under the notice to proceed. When the Contractor's schedule is approved by the College, it shall become an additional contract document and the Contractor shall be required by the contract to comply with it. The project schedule and updates shall be used in determining the amount of the monthly progress payments to the Contractor. The College may also use the schedule and updates to determine if the Contractor is adequately planning and performing the work in accordance with the contract.

B. Form and Content of Schedule.

The Contractor shall prepare the project schedule using Critical Path Method (CPM) scheduling techniques. The Contractor shall utilize the latest revision of Primavera P3 or Microsoft Scheduling software. The Contractor shall prepare a detailed schedule which shows how it will plan, organize, execute and complete the work. The schedule shall be in the form of an activity oriented network diagram (CPM). The principles and definitions used in this section shall be as set forth in the Associated General Contractors of America (AGC) publication "Construction Planning and Scheduling", copyright 1994.

The detailed network diagram shall provide sufficient detail and clarity of form and technique so that the Contractor can plan, schedule and control its work properly, and the College and the architect can readily monitor and

follow the progress of all portions of the work. The network diagram shall comply with the limitations imposed by the scope of the work and contractually specified milestone dates and completion dates. The CPM schedule shall include the arrow or network diagram and the computer produced schedule with dates. The schedule shall include and reflect the following factors:

1. Project phasing, and contract milestones and completion dates.
2. The structural breakdown of the project.
3. The types of work to be performed and the labor trades involved.
4. Reasonable logic and activity durations.
5. Reasonable coordination of all activities.
6. Purchase, manufacture and delivery activities for all major materials and equipment.
7. Deliveries of College furnished equipment.
8. Allowances for work by separate contractors identified in writing by the College at the time of contract award.
9. Submittals and approvals of shop drawings, material samples, and other required submittals.
10. Subcontract work.
11. Crew flows and sizes (manpower).
12. Assignment of responsibility for performing all activities.
13. Access and availability to work areas.
14. Identification of interfaces and dependencies with preceding, concurrent and follow-on contractors, and sequences and interdependence of activities.
15. Testing and inspections.
16. Phased or total inspection, acceptance, and takeover by the College.
17. Utilization of schedule to determine amounts of monthly progress payments.
18. Activities required of the College and the project architect such as approvals, including reasonable durations for the activities.

Activities should be set forth in working days and have a maximum duration of 60 days, except for non-construction activities such as the procurement and delivery of materials and equipment. All durations shall be the result of definitive manpower and resource planning by the Contractor. The level of detail in the schedule shall be subject to the approval of the College. The schedule shall include a reasonable approach to achieve milestones and completion dates in the contract. Any failure of the Contractor to include any element of the work in the schedule shall not excuse the Contractor from completing that work and all of the work needed to complete the project by the completion dates in the contract.

The network diagram is to be prepared by a computer plotter. The logic diagram will be pure logic and shall not be drawn to time scale. The logic diagram shall be drawn on 30" x 42" size sheets and prepared on a tracing/mylar or similar material suitable for reproducing high quality prints.

C. Computerization of Schedule.

The mathematical analysis of the detailed network diagram shall be made by computer, and the tabulation for each activity shall include the following:

1. Activity numbers.
2. Activity descriptions.
3. Durations in work days for each activity.
4. Earliest start date (by calendar date).
5. Earliest finish date (by calendar date).
6. Latest start date (by calendar date).
7. Latest finish date (by calendar date).
8. Slack or total float in work days.

The following computer documents shall be prepared as part of the initial schedule submission and each update:

1. Activity file sort, including sorts listing activities required of the College and the project architect, such as approvals.
2. Eight week "Lookahead" detailed bar chart.
3. Eight week summary bar chart.
4. Additional computer sorts requested by the College.
5. High density floppy disks or CDs of all computer files.

D. Weather Inclusion in Schedule.

Seasonal weather conditions shall be included in the schedule, including average precipitation, temperature and other weather conditions typical in the geographic area over a 5 year period by quarterly period (spring, summer, fall, winter).

E. Schedule Updates.

The Contractor shall prepare schedule updates monthly until its contract and the project are completed. The first update shall be issued 30 calendar days after the construction start date specified in the notice to proceed. Updates shall include the following information:

1. Actual start and completion dates for activities.
2. Activity percent completion.
3. Remaining durations for activities in progress.

Each schedule update shall also include a narrative report which includes the following information:

1. Summary of work completed during update period.
2. Comparison of actual progress and status to activities and dates in original schedule.
3. Analysis of critical path including affect of activity progress on critical path.
4. Analysis of secondary critical paths, meaning float within 10 days of the project critical path.
5. Analysis of time lost or gained during the update period.
6. Identification of problem areas.
7. Identification of change orders and delays impacting or delaying the project under the project schedule.
8. Solutions or proposed solutions to current problems and delays.
9. Extensions requested by the Contractor, including activities affected and the amounts, and the reasons for the requests.
10. Extensions granted by the College for delays and changes, including the activities affected and the amounts, and any effect on the critical path and contract completion dates.
11. Delays in activities required of the College and the project architect, and activities which they are required to complete in the update period following the issuance of the update.

All schedule updates must be submitted to the College and the architect for approval. Schedule updates including the reports which are approved by the College shall be deemed to be official records of the progress and status of the project under the schedule and the contract, and may be utilized by the College in determining if the Contractor is adequately planning and performing the work under contract.

F. Meetings/Eight Week Bar Charts.

The Contractor's project manager and scheduler shall arrange for and attend monthly progress and scheduling meetings with the College and the project architect. Monthly progress meetings shall be scheduled 3 to 7 days after monthly schedule updates and reports are issued and provided to the College and the project architect. The purpose of

these meetings will be to review past progress, current status, problem areas, delays, measures to reduce delays, future progress, and the Contractor's most recent schedule update and report. At the monthly progress meetings, the Contractor shall provide look ahead summary and detailed bar charts showing the work and activities to be performed and/or completed during the 8 week period following the schedule update.

G. Schedule Documentation for Contract Payments.

The Contractor will not be entitled to payments under the contract until a project schedule has been submitted to and approved by the College. No payment will be made under the contract if, when the payment is due, a schedule update and narrative report is due under this paragraph but has not been submitted to and approved by the College. The original CPM project schedule shall include a breakdown allocating the total contract price among the network activities in the schedule which must be approved by the College.

H. Progress, and Recovery Schedules.

The Contractor shall perform its work in accordance with the schedule. If the Contractor's work falls behind the requirements of the schedule, it shall at its own cost institute measures to improve its progress and bring its work in compliance with the schedule, including but not limited to increasing manpower, increasing work hours per shift, increasing shifts, increasing working days per week, and re-scheduling work activities to perform them concurrently where feasible.

If monthly schedule updates show that the Contractor's progress has fallen behind the project schedule so as to jeopardize the achievement of milestone or completion dates in the contract by more that 10 work days, the Contractor shall, if requested by the College in writing, prepare a recovery schedule with acceleration measures to regain the lost time, and shall proceed in accordance with the recovery schedule in additional to the project schedule at its own cost.

I. Contractor Failure to Provide Schedule Updates.

If the Contractor fails to provide monthly schedule updates and reports when required, the College can elect in it sole discretion to employ any of the following remedies: 1) not make progress payments; 2) on 10 days written notice to the Contractor, retain its own consultant to provide schedule updates and reports and deduct the cost from the contract price; 3) terminate the contract for default in accordance with the termination provision in these general conditions.

J. Scheduler Qualifications.

The Contractor must utilize a scheduler which satisfies the qualification requirements for the project. If at any time during the project it appears that the Contractor's scheduler is not competent to provide the scheduling services required in this article, the Contractor shall within 10 days after a written notice and demand from the College, retain a replacement scheduler which is competent to provide the services required. The College may also utilize any of the remedies in this article and the contract and general conditions for the Contractor's failure to provide proper schedule updates and reports.

ARTICLE 9. EXTENSIONS, COMPENSATION FOR CERTAIN EXTENSIONS.

A. Delays Warranting Extensions of Contract Dates.

If the Contractor is unavoidably prevented from completing any part of the work within the milestone, substantial completion or final completion dates in the contract by causes beyond the control and without the fault of the Contractor or its subcontractors, those contract dates will be extended by amounts equal to the time lost due to such delays, provided the Contractor requests extensions in accordance with this article. Delays warranting extensions of the contract dates include unforeseeable and unavoidable delays caused by the College, the project architect, other contractors employed by the College, utility owners or other third parties, acts of God, acts of governmental authorities, wars, abnormal weather conditions, fires, floods, earthquakes, epidemics, plagues, and other unavoidable casualties. The

contractor has 24 hours to notify the owner in writing from the start of a delay with a clear and concise reason for the delay, otherwise the delay will not be reviewed. This limited time frame is to provide the College the opportunity to immediately address the issue and limit the amount of time in the potential delay and its potential impact on the project schedule.

B. Weather Delays.

No time extensions will be granted for time lost due to normal seasonal weather conditions. To qualify for a time extension due to unusually severe or abnormal weather conditions, the Contractor must demonstrate that the weather conditions during a given quarterly period (summer, fall, winter, spring) were more severe at the project site than the previous five year average for the geographic area by quarter, and that the weather conditions critically impacted contract milestone, substantial completion or final completion dates by delaying the performance of work on the project's critical path. No time extensions will be considered for any weather conditions that do not affect work on the critical path or contract dates.

Where the cause of delay is due to weather conditions, extension of time shall be granted only for unusually severe weather, as determined by reference to historical data. The term "historical data" as used in the preceding sentence shall be construed according to this formula: Average rainfall (or snow or low temperature) for the past five years for the month in question, plus 10 percent. In other words, weather is not deemed to be unusually severe unless it is 10 percent worse than the average for that month over the last five years.

Apart from extension of time, no payment or allowance of any kind shall be made to the Contractor as compensation for damages on account of hindrance or delay from any cause in the progress of the work, whether such delay be avoidable or unavoidable. The Contractor agrees that he will make no claim for compensation, damages for any such delays, and will accept in full satisfaction for such delays said extension of time.

C. Float Time Use.

Float time in the schedule is not for the exclusive use of either the Contractor or the College. Float time is available for use by both parties to facilitate the effective use of available resources and to minimize the impact of problems and delays which may arise during construction. No time extension will be granted as a result of any problem, change order or delay which only results in the loss of available positive float on the project schedule. Float time shown on the project schedule shall not be used by the Contractor in a manner which is detrimental to the interests of the College or the project.

D. Calculation of Extensions.

Extensions will be calculated based on the effect of delays on the project schedule and the activities in the schedule. If the Contractor is entitled to an extension for a delay based on the nature of the delay under this article, the activities in the schedule affected by the delay will be extended by the amount they are affected. If extensions of activities in the project schedule affect the critical path and delay the contract milestone and completion dates, they too will be extended to the extent affected. The critical path and contract dates will only be extended to the extent that they are actually affected under the schedule by a delay for which the Contractor is entitled to an extension.

If for any scheduled activity or period there are concurrent delays which include delays for which the Contractor is entitled to an extension and delays for which the Contractor is not entitled to an extension, the Contractor will be given an extension for the delays for which it is entitled to extension so that it will not be liable to pay liquidated damages for delay, unless the College eliminates or reduces that delay. A concurrent delay will not justify an extension to the Contractor if it has minimal effect on the completion of the project, and/or if it would likely have been avoided if it had become apparent that it was having an effect on the progress of the project and the project completion date.

E. Elimination of Delays and Extensions (Acceleration).

If the effect of a delay for which the Contractor is entitled to an extension can be reduced or eliminated by changes in the schedule or other measures which have no material adverse impact on the Contractor in terms of cost or otherwise, the Contractor shall employ those measures so that no extension is required or so that a shorter extension is required. If the Contractor is entitled to extensions for delays, and if the College (in its sole discretion) notifies the Contractor in writing that it prefers to eliminate the lost time to avoid or reduce the extension required, by changes or additional efforts such as acceleration efforts, the Contractor shall perform those measures as a change to the contract to be compensated under the change order provisions of the contract and the general conditions.

F. Requests for Extensions Required.

The Contractor must provide the College with a written notice of delay and request for an extension within 24 hours of the beginning of a delay, or it will not be entitled to a review. The written notices of delay and requests for extensions must include the nature and cause of the delay, the known extent of the delay, the work activities on the project schedule affected by the delay and the extent of the affect to each, and suggestions or proposals to reduce or eliminate the delay.

G. Compensation for Certain Extensions and Limitations.

Under the contract and general conditions, the College does not assume responsibility for many types of delays, including additional costs resulting from extensions granted because of those delays. Where the College is responsible for a delay under the express terms of the contract and general conditions, it will pay extra compensation for any extension granted because of the delay.

Compensation by the College for delays (and extensions) for which it is responsible under the contract and general conditions shall only include additional costs actually incurred at the site, and shall not include home office expense, home office overhead, lost profit or consequential losses. Any additional compensation under this paragraph shall be subject to the provisions in the contract and general conditions regarding claims, and the provisions in the contract and general conditions regarding the maintenance and availability of cost records.

No compensation will be paid if an extension for a delay for which College is responsible is concurrent with another delay for which the Contractor is not entitled to an extension, or is concurrent with another delay which the Contractor is entitled to an extension but the College is not responsible for the other delay.

If the College requests a change in the contract work, potential delays and extensions which result from the change and any resulting extra compensation for the change shall be addressed under the change order provisions in the contract and the general conditions in addition to this article.

ARTICLE 10. PAYMENTS TO CONTRACTOR.

The College will pay the Contractor as full compensation for performing the contract the contract price as adjusted by approved change orders which increase or decrease the contract price. The College will do so in accordance with this article, any supplemental general conditions regarding payment, and the payment terms in the signed contract. Payment provisions in the supplemental general conditions which add to or modify this provision shall take precedence over this provision. Payment provisions in the signed contract which add to or modify payment terms shall take precedence over the supplemental general conditions and this article.

A. Monthly Progress Payments.

The College will pay the Contractor monthly progress payments as the contract work proceeds and will pay for work completed, less retainage. The Contractor shall submit monthly invoices using the College's invoice form for the work completed in each calendar month, and the monthly invoice shall be submitted in accordance with the contract. The Contractor shall be entitled to monthly progress payments based on the percentage of the contract work completed (less earlier payments), and that amount shall be based on the unit schedule breakdown and the update of the CPM for the

billing period showing schedule activities completed and progress on incomplete activities, in conjunction with the values assigned to those activities. If there is a discrepancy between the amount due based on the unit schedule breakdown and the amount due based on the CPM update, the Contractor shall only be entitled to the lesser amount unless the Owner's Representative, in his/her sole discretion, decides otherwise.

B. Unit Schedule Breakdown/CPM Activity Price Breakdown.

Before the contract is signed, the Contractor shall submit to the College and the architect a unit schedule breakdown (schedule of values) utilizing the College's form which reasonably allocates the contract price among the principal categories of work and materials in the contract. The unit schedule breakdown must be signed by the Contractor and is subject to approval by the architect and the College for use in calculating monthly progress payments under the contract. The Contractor shall not "front end load" the unit schedule breakdown. The unit schedule breakdown may include line items for mobilization, bonds and insurance.

The Contractor's proposed CPM schedule shall reasonably allocate the contract price among the activities in the schedule so that monthly CPM schedule updates can be utilized in connection with the unit schedule breakdown in determining the amount of monthly progress payments. The Contractor's unit schedule breakdown and CPM activity price breakdown must be approved by the architect and the College before any payments are made under the contract.

C. Invoices for Monthly Progress Payments: Form and Content.

The Contractor must utilize the College's invoice form and the invoice forms must be completed before they are submitted for payment. Each invoice must be signed by the Contractor, and shall certify that the work and materials represented as having been provided have been provided, and that all subcontractors and all suppliers on the project have been paid all amounts legitimately due for work and materials billed to the College in earlier invoices which were paid by the College.

Invoices for monthly project payments must include the status of the work in the unit schedule breakdown and the CPM update for the billing period which shows the activities completed or started and the value of them based on the CPM schedule. Invoices must also include certified payrolls for the Contractor and all subcontractors for the billing period, affirmative action monthly manning reports, a certification of subcontractor/supplier payments, a partial waiver of liens, a list of all materials stored to date including descriptions, values, quantities and location, and any documents required in the contract documents.

The Contractor will be entitled to have an invoice paid if the architect and the College approve the invoice including the percentage of work completed, and if the quality of the work and materials conform to the contract documents. The approval of invoices shall not waive claims for defects or deficiencies in the work or materials provided, or the right to subsequently inspect the project as a complete and functioning whole.

D. Payment for Materials and Equipment Procured But Not Installed.

The Contractor may seek payment in monthly invoices for materials and equipment delivered to the project site but not yet incorporated into the work. The Contractor shall include with its monthly invoices a list of the stored equipment, the amount and type of stored materials, and the place where they are stored. Each invoice which seeks payment for materials and equipment delivered to the project site but not installed or incorporated into the work shall include a signed bill of sale to the College and an invoice from the supplier. All risk of loss or damage for materials and equipment delivered in the project site shall remain with the Contractor.

The College will only rarely pay for material or equipment stored offsite, and only when it determines in its sole discretion that there is good cause. The College will consider no request to pay for materials or equipment stored off site unless the Contractor includes a written request for such payment with its bid for the project. If the College does agree to pay for material or equipment stored off site during the performance of the contract, it will do so when the contract is signed.

If the College does agree to pay for materials and equipment stored off site, such payments shall be subject to any conditions in the signed contract, and in all cases, a bill of sale to the College, a paid invoice, insurance and proof the storage facility is bonded will have to be provided to the College when each payment is sought. The location will have to be specified in writing and the material or equipment will have to be inspected by the College. The Contractor and it performance bond surety must agree in writing that they retain all risk of loss or damage, and each payment application must contain a consent to payments for materials stored off site signed by the Contractor's bonding company.

Payments on account of materials or equipment not incorporated in the Work but delivered and suitably stored at the site, or at some other location agreed upon in writing, may be made by the Owner subject to the following conditions:

Such materials or equipment shall have been fabricated or assembled specifically for the Project and delivered to storage no earlier than needed for the orderly progress of the Work as demonstrated by the Progress Schedule.

Title to such materials or equipment shall pass to the Owner pursuant to the Contractor's bill of sale which shall contain guarantee of replacement thereof in the event of damage thereto or disappearance thereof due to any cause. The Contractor shall also affirm that it will pay for such materials or equipment immediately upon receipt of payment therefore from the Owner.

In the case of off site storage, the Contractor shall also provide Consent of Surety to such payment and insurance of such materials or equipment against the perils set forth in the General Conditions both while storage and during transportation to the site. Raw materials or other materials or equipment readily duplicated or usable on other projects will be paid for only after the materials are incorporated in the construction.

E. Retainage.

The College will retain 2% of monthly progress payments as retainage. After the contract construction work is 50% complete based on the CPM schedule updates and the unit schedule breakdown and approved invoices, the College may make monthly progress payments less 2% retainage if at that time the Contractor's performance and progress conform to the contract and the approved CPM schedule, if progress is otherwise satisfactory, and if the architect and the College authorize retainage to be reduced.

When the certificate of substantial completion is issued, the College may reduce the retainage being held plus the cost of all work remaining to be completed at that time. After retainage is stopped, the College may later reinstitute it if the Contractor's progress or work becomes unsatisfactory.

The contractor will be directed by the College at the time of any approved retainage reduction to provide a separate requisition for the retainage only plus written consent from the surety.

F. Payment for Change Order Work.

The Contractor shall invoice for change order work in the monthly contract progress payment invoices as the change order work is performed, but may only do so after a written change order has been signed by the appropriate College personnel and a purchase order issued by the College.

G. Final Payment.

Upon final completion of all work included in the contract including all change orders, upon acceptance of the work by the architect and the College, and upon the issuance of the final acceptance certificate, the Contractor will be paid the fully adjusted contract balance including any retainage. The Contractor shall submit an invoice for the final payment, and that invoice must include a release of all claims except claims expressly identified and described in the invoice including the amounts. The final invoice must be accompanied by all warranties, guarantees, manufacturer literature, approved as-built drawings, shop drawings required, and other documents which the Contractor is required by the contract to provide to the College at the time of final completion. The final invoice must also include a written signed consent to the final payment signed by the Contractor's bonding company.

H. Payment Terms.

All invoices and payments shall be subject to the terms of the contract and the general conditions, including the provisions regarding payments, and to the right of the College to withhold payments or to make deductions from payments for damages, defective work, liquidated damages, third party claims, failure to complete work, contract requirements, failure to comply with schedule obligations or other causes authorized by the contract documents. See also the Prevailing Wage Act requirements in the signed contract.

I. Payment Based on Partial Acceptance (Limitation).

The College will not accept portions of the project as substantially or finally complete unless specified elsewhere. If the specifications authorize partial acceptances, they will also specify the terms and conditions of such acceptances.

J. Failure to Pay Amounts in Dispute Not to Affect Performance.

The failure of the College to pay any amount requested by the Contractor in an invoice based on a determination that the invoice is improper or some other dispute shall not entitle the Contractor to stop or slow down the performance of the contract work.

K. Waiver of Certain Claims by College Against Contractor in Connection with Final Payment.

In its final acceptance certificate the College shall certify that it has no claims against the Contractor in connection with the performance and completion of the contract except for claims listed in the final acceptance certificate, such as claims for cost overruns, delays, or known defects. The College's certification shall not apply to or release post-completion claims, such as claims for defects or other problems in the completed project which are discovered or which become serious after project completion, warranty or maintenance claims, indemnity or contribution claims, claims for damage occurring after completion, or other claims for the performance of post-completion obligations in the contract or problems which manifest themselves after completion.

ARTICLE 11. CHANGES.

A. Changes Authorized.

The College may at any time authorize and direct changes in the work or accelerations of the work which increase or decrease the contract price. All changes including changes in the contract price shall be governed by this Article and the change provision in the contract. All changes must be in a written change order signed by the Vice President for Facilities, Construction and Campus Safety, the Owner's Representative, the architect and the contractor. A Purchase Order will then be issued by the College and signed by the Contracting Officer. At which time the contractor can then bill for the completed change order work. Any extensions in the contract times and increases in compensation because of extensions resulting from changes shall be governed by Article 9 regarding extensions, but the authorization for the extra compensation itself resulting from an extension must be contained in a change order which complies with this Article as well. The College may elect to have changed work on the project which is within the scope of this contract performed by another contractor. Changes in the contract shall not affect the surety bond protection or insurance coverage required by the contract.

B. Change Request or Directive.

The College may request a change in the work or materials to be provided under the contract by a written contract change directive ("CCD") signed by the Owner's Representative. If the College is of the opinion that no change in the contract price or times is required because of the change request, it shall so state in the CCD. A CCD may include provisions regarding the scope of the changed work or materials, and may also include conditions including time parameters or an upset price. A CCD may provide that specified contract work shall stop until further notice, but the Contractor shall not stop or delay any contract work because of a CCD unless the CCD provides that work should stop because of the change. A CCD may provide that the performance of changes shall not commence until a change order is issued and a subsequent purchase order is issued and signed by the Contracting Officer, or that changed work should proceed before a change order and purchase order are issued by the College to maintain the progress of the project.

C. Change Orders Which Are Protested.

If the Contractor protests the terms of a change order, it shall notify the College in writing within 2 business days of its protest. It shall describe the terms which it objects to and the reasons for its protest. It shall include supporting documentation if appropriate. The College may elect to direct the Contractor in writing to perform the change order requirements despite the protest. If it does so, the Contractor's right to pursue further relief based on the protest shall be preserved and the contractor shall immediately proceed with the change work

D. Changes Affecting Contract Times.

Changes and change orders shall not affect or extend any of the contract times unless the change order itself specifies that it changes contract times. If a change order issued by the College delays the completion of any activity in the project CPM schedule, the time allowed for that activity shall be extended, and if a delay in that activity delays other activities, the critical path or the completion dates in the contract, they too will be extended. The Contractor shall make reasonable efforts in scheduling changed work so that it does not delay or extend activities in the CPM schedule including the substantial and final project completion dates. The Contractor shall also make alternate proposals for change order work which include acceleration for the changed work where feasible to achieve this goal, and shall include the cost of such efforts in its change order requests.

Change orders must specify whether they result in any delay (or extension) to any critical path activities in the schedule, including an identification of the activities and the amount of delay in each. If no delay or extension is set forth in a change order, it will be deemed an agreement by the College and the Contractor that no delay or extension results from the change order.

E. Contractor Initiated Change Order Requests.

If the Contractor contends that any directive or communication from the College or architect, or any condition, event or circumstance entitles it to a change order changing the contract scope, terms, price or times, it shall submit a written change order request to the Owner's Representative within 5 days of the event upon which the request is based.

The written request shall specify the terms of the change order requested, and include all documentation and information which the Contractor seeks to have considered in support of the request, or which is necessary to a proper consideration of the request.

F. Change Order Amounts.

All price changes or amounts in change orders shall be based on (1) lump sum, (2) actual work time and materials plus mark-ups for overhead and profit, or (3) unit prices times actual quantities which may or may not include separate mark-ups for overhead and profit. If a change order price is to be based on a lump sum price or a unit price, the College may request the submission of such documentation regarding market price or cost which it reasonably deems necessary to determine a lump sum or unit price. If a change order is based on actual work time and material costs, it will include a not-to-exceed price.

Applications for payment for change order work shall be included in monthly progress payment invoices as the change order work is performed, but only after a purchase order has been issued to the contractor by the College. For change orders based on time and material costs or unit prices times actual quantities, the time spent, material provided, and quantities performed shall be recorded in daily time slips, material invoices, and quantity of work performed tickets which are signed by a representative of the College to certify that the work and materials were provided, and the quantities. Labor costs and material costs for change orders shall be based on actual costs to the Contractor without any mark-ups except as provided in this Article.

Mark-ups may be added to time and material costs where a change order is authorized to be paid on a time and material basis, and also unit price change orders if the change order price term expressly authorizes mark-ups as a separate additional charge to be added to the unit price. When mark-ups for overhead and profit are authorized, the standard mark-up for overhead and profit shall be 15% of net costs properly invoiced in the change order. The schedule for mark ups is as follows:

- 15% of direct costs for overhead, profit, bond, and insurance for work performed directly by the contractor;
- 15% of direct costs for overhead, profit, bond, and insurance for work performed directly by the subcontractor and 5% of the direct and indirect costs of the work performed by the subcontractor for the contractor;
- 15% of direct costs for overhead, profit, bond, and insurance for work performed directly by the subcontractor's subcontractor and 5% of the direct and indirect costs of the work performed by the subcontractor's subcontractor for the subcontractor and 5% of the direct and indirect costs of the work performed by the subcontractor for the contractor;

There shall be no additional mark-ups for materials or suppliers and bond and insurance costs are included in the noted mark ups above. Refer to Division 1 specifications also for further delineation of items included in mark ups.

CONTRACTOR MUST USE THE COLLEGE OF NEW JERSEY FORM INCLUDED IN THE PAYMENT PROCEDURE DOCUMENTS.

G. Right to Audit Extra Costs (Before and After Payment).

The College reserves the right to audit all change orders and additional costs claimed and/or paid under the contract at any time.. The obligation of the Contractor, subcontractors and suppliers to establish, maintain and produce cost records and remedies for failing to do as specified elsewhere in these general conditions and the contract shall govern. If an audit reveals that actual costs invoiced to the College and/or paid by the College in change orders exceed the actual costs incurred, the Contractor shall refund the excess, or the College may deduct the excess from future payments under the contract, or the College may assert claims against the Contractor and/or its surety for such overpayments.

H. Change Orders with Both Price Increases and Decreases.

If a change order reduces the scope of the work or materials to be provided by the Contractor under the contract, the change order shall provide for a reduction in the contract price in the amount of the actual reduction in cost. If a change order results in both added costs and reduced costs, they shall be combined for a net plus or minus contract price adjustment, and when mark-ups are applicable, they shall only be added to a net increase in the contract price which results from a combination of additions and deductions in the change order.

I. Waiver of Rights In Connection with Change Orders Issued Without Protest.

The Contractor shall not be entitled to seek any additional compensation or any extension of the contract times beyond the amounts and any extensions included in a change order signed by the College or a written change order request submitted by the Contractor to the College for approval, the intent being that the Contractor must disclose all additional costs and delays claimed to result from a change so that the College can take measures in considering the change to effect cost savings and avoid delays. The failure to include extra costs or delays in a change order request will preclude the Contractor from later claiming such costs or delays in connection with the change in any form or fashion.

ARTICLE 12. COMPLETION.

A. Substantial Completion.

When the Contractor believes that the project is substantially complete, meaning all essential requirements of the contract have been sufficiently completed so that the project can be occupied and used for its intended purpose, it can make a written request to the architect and the College to conduct an inspection and to issue a certificate of substantial completion. The Contractor's request shall list all work and contract requirements which remain to be completed or corrected and an estimate of the value of the incomplete items.

The architect and the College will conduct an inspection, and if they determine the Contractor has substantially completed the project, the College will issue a certificate of substantial completion. If they determine that the Contractor has not achieved substantial completion, the College will notify the Contractor in writing and will list the work and contract requirements which must be completed for substantial completion and provide a punchlist. They will also assign a value to the incomplete items to be added to the 2% retainage held after the certificate of substantial completion is issued. The College and the architect will re-inspect when the Contractor notifies them in writing that those items have been completed.

Any failure of the College or architect to include incomplete or deficient items in a certification of substantial completion or a notice regarding a substantial completion inspection shall not affect the Contractor's obligation to properly complete all requirements of the contract.

The College will not issue a certificate of substantial completion unless it can occupy and use the project for its intended purpose, and the Contractor agrees that the College's use and occupancy of the project shall not affect the Contractor's obligation to complete the project and contract requirements. The Contractor also agrees that its completion of the project will not unreasonably interfere with the College's occupancy and use of the project.

Unless otherwise specified in the supplemental general conditions, a certificate of substantial completion will not be issued unless an unqualified temporary or permanent certificate of occupancy is issued, and the College is able to use and occupy the project without interruption.

After substantial completion, the Contractor is relieved of the duty of maintaining and protecting the project, and of its responsibility for damage to the project occurring after substantial completion, except insofar as such damage or any repair is covered by warranty, or is caused or made necessary by the act of the Contractor or anyone for whom the Contractor is legally or contractually responsible, or is attributable to defects. The issuance of a certificate of substantial completion shall not void or alter any of the other terms of the contract documents, including but not limited to terms relating to warranties, or relieve the Contractor of its obligation to complete the work or remedy defective work or materials, unless such terms are expressly modified by the certificate of substantial completion.

Guarantee periods for equipment, workmanship and materials shall commence when the certificate of substantial completion is issued or from the completion and acceptance of equipment, workmanship or materials, which ever is later, unless otherwise specified in the supplemental general conditions or the certificate of substantial completion.

The rights of the Contractor regarding payments upon the issuance of the certificate of substantial completion shall be as provided in the payment article of these general conditions and the contract.

B. Final Completion.

The Contractor shall notify the architect and the College in writing when it has completed the project and all of the contract requirements. The architect and the College will then conduct an inspection and issue a certificate of final completion if the project and all contract requirements have been totally completed. If any items remain incomplete or unsatisfactory, the College will notify the Contractor in writing and list the incomplete or unsatisfactory items. The Contractor shall immediately complete and correct any unfinished items and notify the architect and College and request a follow-up inspection for final acceptance.

The certificate of final completion will not be issued until all documents required by the contract have been provided, including warranties, maintenance and operating instructions, certificates, insurance, shop drawings required and as-built drawings approved by the architect. Final completion must include leaving the entire project site and project clean, neat and orderly. All distortions, cracks, delaminating and deteriorations of finished surfaces must be remedied. All broken items shall be repaired. All paint spots, stains and plaster must be removed. All unused equipment and excess material shall be removed. The project and the site shall be clean and finished.

If the Contractor unreasonably delays completing and correcting items needed for the issuance of the certificate of final completion, the College may unilaterally issue a certificate of final completion which lists incomplete and defective items, and which deducts liquidated damages and the cost of remedying incomplete and defective items from the final amount due to the Contractor under the contract.

Final payment will not be made until the certificate of final completion is issued, and the final payment shall be subject to the payment provision in the contract and these general conditions.

ARTICLE 13. SUSPENSION AND TERMINATION OF CONTRACT.

A. Suspension.

The College shall have the right to stop or suspend the work in whole or in part at any time. The work may only be stopped or suspended by a written directive of the Owner's Representative, except in an emergency. The representative of the College may stop or suspend the work in whole or in part on an emergent basis, either verbally or in writing, but any such emergent suspension or stop work order shall be confirmed by a written directive from the Owner's Representative within 48 hours. The College may stop or suspend the work because of any conditions affecting health or safety on or off site, any dangerous condition, any environmental hazard, the convenience of the College, or the public interest. If a directive to stop or suspend all or part of the work includes directions to secure the site, the Contractor shall perform the work required in the directive. The Contractor shall also maintain the safety and security of the project during the suspension for the protection of the site, work in place, materials and equipment on site, persons on or near the site, and the College's property.

If all or part of the work is suspended in response to a problem or condition caused by the Contractor's performance of its contract, or parties other than the College itself, or conditions over which the College has no control, the Contractor will not be entitled to any additional compensation for the suspension. If the College directs the suspension of work because of the improper performance of the contract by the Contractor or those performing its contract, the Contractor will not be entitled to any extension of any contract dates or additional compensation by reason of the suspension. If a suspension is directed for reasons other than fault of the Contractor or others involved in its

performance of the contract, the Contractor will be entitled to an extension under and to the extent authorized in Article 9, and additional compensation under and to the extent authorized by Article 11.

B. Termination for Convenience.

The College may by a written directive terminate the contract at any time before completion for the College's convenience or where it concludes that it is in the public interest to do so. The Contractor shall complete any items of work specified in the notice of termination for convenience and any work necessary to make the site safe for all persons and property at or near the project site when the College terminates the contract for convenience under this Article.

Absent Contractor fault or violation of the contract, the Contractor shall be paid in full for all completed work, subject to the payment provisions in the contract and these general conditions. The Contractor will not be entitled to payment for costs and mark-ups for work or materials not provided before the termination, or costs for work and materials not provided unless the Contractor cannot avoid liability to pay those costs, or profit on the portion of the contract which will not be performed because of the termination, or other types of damages. The extra compensation payable to the Contractor in connection with a termination for convenience may include the cost of materials or equipment purchased for the project before termination but not installed if the Contractor cannot otherwise use or sell them.

The Contractor will also be entitled to reasonable costs in reasonable amounts for additional direct costs in connection with the termination, but not administrative, home office or overhead costs, lost profit, or consequential damages. In addition, any claims shall be subject to the provisions in the contract and general conditions regarding claims and the maintenance of cost records.

The Contractor shall also include provisions similar to this provision in subcontracts and supply contracts for the project. When a termination for convenience is directed by the College, the contract shall be closed out in accordance with the provisions of the contract and these general conditions regarding payment and project completion.

C. Termination for Cause.

The College may terminate the contract for cause if the Contractor commits substantial violations of the contract and contract documents, persistently fails to perform the work in accordance with the contract documents including the project schedule, fails to comply with applicable laws, rules or regulations, fails to pay subcontractors or suppliers to the extent reasonably required, become insolvent or becomes a debtor in a bankruptcy proceeding, fails to pay its debts, is found to have made false or misleading statements to the College in writing in obtaining the contract or payments, fails to comply with employment discrimination laws, fails to pay prevailing wages, fails to maintain or renew the required insurance, fails to maintain proper protection for the safety of persons or property on the site, fails to comply with reasonable and authorized directives of the College under the contract, or assigns its rights or interests under the contract or payments under the contract to any third party.

If the College terminates the contract for cause, it shall first send a notice of intent to terminate to the Contractor and the Contractor's surety. The notice shall direct the Contractor to remedy or eliminate the deficiency within a specified time if the problem is one that can be eliminated. If the Contractor fails to reasonably comply with the directive and notice, the College may after 10 days issue a notice of termination to the Contractor and its surety which terminates the contract effective immediately and specifies the reason for the termination.

If the contract is terminated the Contractor shall secure the site and take measures to leave the site safe for persons, material, work in place and equipment before departing the site, and shall remove all tools and equipment within 5 days of the termination effective date. The Contractor shall not remove any materials or equipment stored on site. When the contract is terminated, the Contractor shall deliver to any location designated by the College materials purchased for the project and paid for by the College, but not stored on site, together with all appropriate warranties and guaranties.

If the Contractor's surety does not takeover the completion in accordance with this Article, the College may appropriate any or all materials on the site which may be suitable and acceptable and may enter into an agreement for the completion of the project with another contractor, or use other methods to complete the project.

All damages, costs and charges incurred by the College together with the cost of completing the work, will be deducted from any monies due or which may become due to the Contractor for work completed by it before the termination. If such expenses exceed the sum available from the unpaid contract balance, the Contractor and its surety shall be liable and shall pay to the College the amount of such excess in addition to other damages.

The rights and remedies of the College in connection with a termination for cause shall be in addition to other rights and remedies which it has under law, the contract, and the Contractor's bond.

If the College terminates the contract for cause and it is subsequently determined by a court that the Contractor was not in default, or that the termination was legally unjustified, the termination will be deemed to be a termination for convenience under this Article, and the rights and remedies of the Contractor and its surety for the termination will be limited to those which exist in connection with a termination for convenience. If the College terminates the contract for cause, neither the Contractor nor the College may file a suit to recover on any claims arising out of the project before the project is substantially complete.

D. Surety Takeover Following Termination for Cause.

If the College terminates the Contractor for cause, the Contractor's performance bond surety may elect to takeover and complete the Contractor's work and obligations under its contract. If the surety elects to takeover the completion of the contract, it may only do so on the following conditions:

1. The surety must notify the College that it will takeover completion of the contract by a written notice of intent which is signed by a representative authorized to bind the surety within 5 calendar days of the surety's receipt of the College's notice of termination.

2. The surety and the College must execute a written takeover agreement within 10 days after the surety sends its notice of intent to takeover. In the agreement, the surety must agree to assume the obligation to complete the balance of the work under the contract and to perform all of the Contractor's obligations under the contract at the surety's sole cost and expense, and to utilize only contractors approved by the College which approval shall not be unreasonably withheld. The agreement shall provide that the surety is entitled to be paid the unpaid balance under the terminated Contractor's contract in accordance with and subject to the terms of the contract and general conditions.

3. The takeover agreement signed by the surety and the College must also provide that the surety is not relieved of any of its obligations under its payment and performance bond for the project, and that the College retains its right to withhold money for contract payments to compensate damages or for other reasons where authorized under the contract or the general conditions.

4. The takeover agreement signed by the surety and the College must also provide that it is without prejudice to and is subject to all of the rights and remedies of the College, the surety, and the defaulted Contractor, and the surety may not require the College to agree to a takeover agreement which seeks to extinguish any such rights.

5. The surety must also pay without delay all obligations of the terminated Contractor for work and materials on the project, subject to a reasonable allowance of time to investigate and verify claims.

ARTICLE 14. WARRANTY/DEFECTIVE WORK AND MATERIALS.

A. General Work One Year Warranty; HVAC Systems Two Year Warranty.

The Contractor warrants and guarantees for a one year period that all work, materials and equipment conform to the contract documents and will not fail or manifest defects, that the project and all its components will be fit for their intended functions, and that all material and equipment will be new and of good quality.

The general one year warranty period shall commence when the certificate of substantial completion is issued, and the one year period shall commence on that date for all components of the project, including any equipment activated and operated before substantial completion, such as HVAC systems, electrical systems and elevators.

During the one year warranty period, the Contractor shall repair and remedy at its own expense any premature failure, defects or deficiencies in any work, materials or equipment which are discovered or which develop during the one year period, and shall do so within 5 days after receipt of a written warranty claim from the College. The Contractor shall also repair damages caused by any failure or defect covered by this warranty. A failure to provide the warranty service required shall constitute a breach of this warranty obligation as well as other applicable provisions of the contract. This warranty shall not cover failures caused by misuse or abuse by the College.

This general one year warranty is intended to provide the College with prompt warranty service for all aspects of the project for the one year period. It is not intended to limit or extinguish any additional warranties required by any of the contract documents, or provided by manufacturers of systems, equipment or materials provided under the contract. It is not intended to eliminate or reduce the College's rights and remedies under the contract and law for defects and deficiencies in the work, materials and equipment, the time period of the Contractor's general responsibility and liability.

B. Defective Work, Materials and Equipment.

Apart from the general one year warranty provided for in this Article, the Contractor shall be responsible for defective work, materials and equipment and any failure of these items to comply with the contract documents. This obligation shall extend beyond substantial completion, final completion and the general one year warranty in this Article.

If defects in materials or equipment or non-conforming items are discovered during construction and before completion, the Contractor shall promptly correct them at its own expense. If the Contractor fails to correct defective or non-conforming work, material or equipment in response to a written notice form the College, either during construction or after completion, the College may employ others to provide the remedial work and the Contractor and its surety shall be liable for the cost thereof and damages incurred. The Contractor and its surety shall also be liable for the cost of making good all work and material destroyed or damaged by defects or the correction of defects.

If any portion of the Contractor's contract monies remains in the custody of the College, either earned or unearned, the College may deduct money paid to others to remedy defects after notice is sent to the Contractor and damages when the Contractor fails to provide a remedy in response. The Contractor's responsibility for defects and non-conforming work, material and equipment shall not be limited in time except by law.

The Contractor's responsibility for defective work shall not be affected by either the performance or the lack of performance of inspections by the College or the architect. The issuance of payments, a certification of substantial completion or a certification of final completion shall not constitute acceptance of work, material or equipment which is deficient or not in compliance with the contract, or limit the Contractor's warranty or the other contract obligations.

ARTICLE 15. MISCELLANEOUS.

A. Insurance, Bonds, Indemnification.

The Contractor shall provide and/or maintain the insurance, bonds and indemnification required by the contract and law.

B. Prevailing Wage.

The Contractor and its subcontractors shall comply with the New Jersey Prevailing Wage Act, N.J.S.A. 34:11-56.25 through 56.57 and the provisions in the contract regarding prevailing wages.

C. Employment Discrimination.

The Contractor and its subcontractors shall comply with all laws prohibiting discrimination against employees, and shall comply with the provision in the contract regarding employment discrimination.

D. Patents.

If any design, device, material or process covered by patents or copyright is used in the work, the Contractor shall provide for such use by a suitable agreement with the patent or copyright owner. The Contractor shall bear all costs arising from the use of patented materials, equipment, or processes and all copyrighted materials used on or incorporated in the work. The Contractor shall defend, indemnify and save harmless the College from any and all claims for infringement by reason of the use of any such patented or copyrighted items.

E. Emergencies Affecting Safety.

If there is an emergency affecting the safety of persons or property, the Contractor shall take immediate action to prevent damage, injury or loss. The Contractor shall notify the College of the situation and all actions being taken immediately or as soon as possible. If, in the opinion of the Contractor, immediate action is not required, the Contractor shall notify the College of the emergency situation and proceed in accordance with the College's instructions. However, if loss, damage, injury or death occurs that could have been prevented by the Contractor's prompt and immediate action, the Contractor shall be liable for all costs, damages, claims, actions, suits, attorney's fees and other expenses which result.

Any additional compensation or extension of time claims by the Contractor on account of emergency work shall be determined in accordance with the changes provisions of the contract documents. The Contractor shall be responsible for emergencies and costs and delays resulting therefrom which could have been foreseen or prevented with normal diligence, planning, and supervision of the work, or which are caused by the Contractor's failure properly to perform the contract.

The Contractor shall provide the College with a list of the names and telephone numbers of its employees and employees of each subcontractor designated to be contacted in case of an emergency during non-working hours. A copy of this list will shall be displayed prominently at the site so that it is visible when the site is secured and shall be provided to the College's campus police department.

F. Contractor Compliance with Law.

The Contractor shall keep fully informed of all federal, state and local laws, ordinances, regulations and orders of agencies which have jurisdiction or authority which in any manner affect those employed on the project or the project. The Contractor shall at all times observe and comply with, and cause its agents and employees to observe and comply with, all such laws, ordinances and regulations, or orders. The Contractor shall also protect and indemnify the College and its representatives against any claim or liability arising from the violation of any laws, ordinances, regulations, or orders, whether by the Contractor or its employees, agents, subcontractors at any tier, suppliers or materialmen.

G. Environmental Protection - Contractor Duty to Comply with Law.

The Contractor shall comply with all applicable federal, state and local laws and regulations and all conditions of permits pertaining to the protection of the environment. Necessary precautions shall be taken to prevent pollution of streams, lakes, ponds, rivers, wetlands, groundwater, reservoirs, and property by chemicals, fuels, oils, bitumens, or other harmful or hazardous materials as defined by law. Nor shall the Contractor pollute the atmosphere from particulate or gaseous matter in violation of law.

H. No Personal Liability of College Officials.

In carrying out any of the provisions of the Contract, or in exercising any right or authority granted to them by or in connection with the contract, there shall be no liability upon any officer or employee of the College, either personally or as officials of the College, it being agreed that in all such functions they act only as agents and representatives of the College.

I. Recovery of Monies by College from other Contracts with the Contractor.

When the contract documents authorize the College to withhold or deduct money from any monies due to the Contractor, or require the Contractor to pay or return monies for any reason, the College may in its discretion withhold any monies due the Contractor under any other contracts between the Contractor and the College. This right shall not affect the rights of the College against the Contractor or its surety under this contract, and the College shall not be obliged to exercise this right as to any other contract as a condition of exercising its rights against the Contractor or surety under this contract.

J. Buy American Requirement.

The Contractor shall comply with N.J.S.A. 52:32-1 and N.J.S.A. 52:33-1 et seq., which prohibit the use by the Contractor or subcontractors of materials or farm products produced and manufactured outside of the United States on any public work.

K. Modification of Contract.

No modification or amendment of the contract shall be effective unless it is in writing and signed by both the College and the Contractor.

L. State Sales Tax Exemption.

Materials, supplies or services for exclusive use in constructing the project are exempt from the State sales tax. Rentals of equipment are not exempt from any tax under the State Sales Tax Act.

M. Assignment of Contract Funds and Claims Prohibited.

The Contractor shall not transfer or assign to any party any contract funds, due or to become due, or claims of any nature it has against the College without the written approval of the College. The College in its sole discretion and considering primarily the interests of the College may elect either to grant or to deny such approval.

N. Independent Contractor Status.

The relationship of the Contractor to the College is that of an independent contractor. The Contractor agrees that it shall conduct itself consistent with such status, and shall not hold itself out as or claim to be an officer, employee or agent of the College. The Contractor shall not make any claim or demand for any right or privilege applicable to officers or employees of the College, including but not limited to, workers compensation, unemployment insurance benefits, social security coverage, or retirement benefits.

O. Third Party Beneficiary Rights Not Intended.

It is specifically agreed between the College and the Contractor that no provisions of the contract documents are intended to make the public or any member thereof a third party beneficiary of the contract, or to authorize anyone not a party to the contract to maintain a suit for personal injuries, property damage or other claims under the contract. It is also the intent of the College and the Contractor that no individual or firm which supplies materials, labor, services, or equipment to the Contractor for the performance of the work shall be a third party beneficiary of the contract.

P. Gifts to College Employees and Agents Prohibited.

The Contractor shall not give any gifts of any nature, nor any gratuity in any form, nor loan any money or anything of value to any College employee or relative thereof, or any agent of the College. The Contractor shall not rent or purchase any equipment or supplies of any kind from any College employee or relative thereof or any agent of the College.

Q. Contractor Claims: Procedures and Limitations.

Claims by the Contractor against the College shall be subject to the New Jersey Contractual Liability Act, N.J.S.A. 59:13-1, et seq. including the notice and time for suit provisions. For the purpose of determining the time within which The Contractor must file suit under the New Jersey Contractual Liability Act, 'completion of the contract' shall be deemed to have occurred upon achievement of substantial completion as defined in section 12A of these General Conditions.

The Contractor also agrees that it shall not be entitled to assert claims against the College for any compensation beyond that provided for in this contract by reason of the acts or omissions of any third parties, including but not limited to the project architect and any other contractor on the project. The Contractor may not assert claims for extra costs for home offices expenses, home office overhead, lost profits or revenue, or consequential damages as that term is defined in law. All claims shall also be subject to all other pertinent provisions of the contract and the contract documents including the general conditions. The Contractor also agrees that it may not assert any claims for extra costs or damages unless it maintains all the records of its estimated and actual costs as required by this Article. The Contractor also agrees that suits against the College must be pursued in the county where the project is located.

R. Cost Records a Condition of Receiving or Retaining Extra Compensation on Extras, Changes and Claims.

The Contractor shall maintain and retain weekly payroll, material, subcontractor, supplier, overhead and other cost and accounting records for the project, and for additional services or extras required by the College, including all costs which the Contractor is entitled to be paid under the contract. The Contractor shall require its subcontractors on the project to do likewise. The Contractor shall also maintain all estimates and takeoffs used in preparing and calculating its bid price for the contract and change orders. The records shall be maintained and shall be made available to the College or its representatives when requested. These records shall be maintained in accordance with generally accepted accounting principles and practices for a period of 3 years after final payment is received by the Contractor, or the duration of any dispute or law suit arising out of the project, whichever is later.

Any failure to maintain or produce the records required by this Article shall preclude the Contractor from claiming or being paid or retaining any payments or being paid on any claims which are based on costs, expenses or losses incurred by the Contractor or its subcontractors which should be reflected in the records required by this Article or good business practices. This record keeping requirement applies to records related to the basic contract compensation as well as extra compensation for change orders and claims of all kinds.

No claim by the Contractor against the College for payment, whether for contract work, extras, changes or claims which is based to any degree on costs which should be recorded in cost records required by this Article or good business practices may be asserted against the College to the extent the cost records do not exist or are not provided to the College upon demand.

The College reserves the right to audit the records of the Contractor and its subcontractors for up to 3 years after the final acceptance of the project, and to demand repayment by the Contractor and its surety of any overpayments discovered in an audit.

The College of New Jersey

Campus Town Sidewalks

General Requirements and Technical Specifications

March 14, 2014

Clarke Caton Hintz
Architecture
Planning
Landscape Architecture

100 Barrack Street
Trenton NJ 08608
Tel: 609 883 8383
Fax: 609 883 4044

Michael F. Sullivan, ASLA,
Licensed Landscape Architect
NJ License #AS00612

The College of New Jersey

Campus Town Sidewalks

General Requirements and Technical Specifications

March 14, 2014

Clarke Caton Hintz
Architecture
Planning
Landscape Architecture

100 Barrack Street
Trenton NJ 08608
Tel: 609 883 8383
Fax: 609 883 4044

PROJECT MANUAL – TECHNICAL SPECIFICATIONS

CAMPUS TOWN SIDEWALKS AND PLANTINGS
THE COLLEGE OF NEW JERSEY

FOR

THE COLLEGE OF NEW JERSEY
2000 PENNINGTON ROAD
EWING, NJ 08628

TABLE OF CONTENTS

NUMBERS	TITLES	PAGES
DIVISION 01	**GENERAL REQUIREMENTS**	
Section 011000	SUMMARY OF WORK	011000-1 to 011000-2
Section 010250	MEASURMENT AND PAYMENT	012500-1 to 012500-5
Section 011000	PROJECT PROCEDURES	011000-1 to 011100-4
Section 013000	SUBMITTALS AND SUBSTITUTIONS	013100-1 to 013100-8
Section 013100	QUALITY CONTROL	013100-1 to 013100-4
Section 013200	TEMPORARY FACILITIES	013200-1 to 013200-4
Section 013220	PHOTOGRAPHIC DOCUMENTATION	013220-1 to 013220-2
Section 013300	CONTRACT CLOSEOUT	033000-1 to 033000-4
Section 013400	RECORD DOCUMENTS	013400-1 to 013400-3
Section 015240	CONSTRUCTION WASTE MANAGEMENT	015240-1 to 015240-4
	TECHNICAL SPECIFICATIONS	
DIVISION 02	**DEMOLITION**	
Section 024119	SELECTIVE DEMOLITION	024119-1 to 024119-4
DIVISION 03	**CONCRETE**	
Section 033100	CAST-IN-PLACE CONCRETE	033100-1 to 033100-10
Section 033200	CONCRETE PAVING	033200-1 to 033200-10
Section 033300	INTEGRAL COLORED CONCRETE	033100-1 to 033100-5
DIVISION 04	**MASONRY**	
Section 042000	UNIT MASONRY	042000-1 to 042000-16

DIVISION 32 EXTERIOR IMPROVEMENTS

Section	321000	EARTH MOVING	321000-1 to 321000-9
Section	321416	PAVERS	321416-1 to 321416-5
Section	329200	LAWNS AND GRASSES	329200-1 to 033200-9
Section	329300	PLANTINGS	329300-1 to 033100-15

SECTION 01010
SUMMARY OF WORK

PART 1- GENERAL

1.01 RELATED DOCUMENTS

Drawings and general provisions of the specifications, including General and Supplementary Conditions and other Division 1 Specification Sections, apply to this Section.

1.02 WORK COVERED BY CONTRACT DOCUMENTS

A. The Project consists of all work noted on the drawings and in these specifications for the Campus Town Sidewalks Project

1. Project Location: The College of New Jersey, Ewing New Jersey
2. Owner: The College of New Jersey, State of New Jersey

1.03 CONTRACTS

A. The project contract is between The College of New Jersey and the single prime contractor performing the work specified.

B. Definition of Extent of Contract Work: The contract documents, specifications, project drawings, manufacturer's installation handbooks, TCNJ form of agreement, and the contractors response to the RFP represent the extent of the construction contract.

1.04 CONTRACTORS USE OF PREMISES

A. General: During the construction period the Contractor shall have full use of the premises for construction operations, including use of the site. The contractor's use of the premises is limited only by the Owner's right to perform work, retain other contractors on portions of associated projects, or to access the building for the occupants.

1. Contractor is to coordinate their work with the activities for each work location.

B. Use of the Site: Limit use of the premises to areas required for equipment and material storage and access to the roof area. Confine operations to areas within contract limits indicated. Do not disturb portions of the site beyond the areas immediately adjacent to where the work is being performed.

1. Owner Occupancy: Allow for Owner occupancy and use by the public.
2. Driveways and Entrances: Keep driveways and entrances serving the premises clear and available to the Owner, the Owner's employees, and emergency vehicles at all times. Do not use these areas for parking or storage of materials unless previously approved by the owner. Schedule deliveries to minimize space and time requirements or storage of materials and equipment on -site.
3. Burial of Waste Materials: Disposal of organic and hazardous materials on-site either by burial or burning, will not be permitted.
3. Parking is allowed with in the construction fence only. If more parking is needed, there is additional parking provided at the colleges Carlton Avenue parking lot. The contractor is responsible to shuttle workers back and forth as needed.

C. Use of the Existing Building: Maintain any existing building in a weathertight condition throughout the construction period. Repair damage caused by construction operations. Take all precautions necessary to protect the building, its contents, components, and systems and its occupants during the construction period.

PART 2 - PRODUCTS (Not Applicable)

PART 3- EXECUTION (Not Applicable)

END OF SECTION 01010

SECTION 01025 – MEASUREMENT AND PAYMENT

PART 1 - GENERAL

1.01 SCHEDULE OF VALUES

A. Each Contractor shall prepare a schedule of values in coordination with the preparation of progress schedule. Correlate line items with other administrative schedules and forms required for the work, including progress schedule, payment request form, listing of subcontractors, schedule of allowances if any, schedule of alternates if any, listing of products and principal suppliers and fabricators, and schedule of submittals. Break down principal subcontract amounts into multiple line items for each entity of work. Round off to nearest whole dollar, but with total equal to Contract Sum Submit 4 copies of schedule of values to the Owner and Architect for review and approval.

- **Upon Owner/Architect approval, Owner will return the Schedule of Values to the Contractor for the Contractor to submit to the bonding company for their acceptance. Payments will not be made to the Contractor until the bonding company has provided a written acceptance to the Owner.**

B. The schedule of values shall be tabulated into subcontracts and trades with the Quantity, Labor, Material, and Total Cost indicated. The Schedule of Values shall include such items as bonds, insurance, allowances and alternates, punchlist/close out documents and shall enclose copies of invoices and/or cancelled checks from bonding and insurance agents.

C. Schedule of values shall be submitted on AIA Form G703 or similar form approved by the Architect and Owner.

D. Each Contractor's monthly application for payment shall be in the same schedule form, reflecting the same items from above. Unit costs shall be realistic for their part of the Work.

1.02 CHANGES IN THE WORK

A. When a change in the Work includes a category or categories of Work both added to and deducted from the Contract, the total quantities of added Work and of deleted Work shall be determined separately for each category and the appropriate unit price or net cost of the Work shall be applied to the difference between the two total quantities.

B. Unit prices shall be inclusive of all costs and shall be applied to units of measure as defined in the Specifications for each category of Work.

C. For all extra Work performed by the Contractor, the gross cost to the Owner shall include the net cost of the Work to the Contractor plus an allowance for overhead and profit not to exceed 15% of the net cost.

D. For all extra Work performed by a Subcontractor, the gross cost to the Owner shall include the net cost of the Work to the Subcontractor plus an allowance for overhead and profit not to exceed 15% of the net cost, plus the Prime Contractor's overhead and profit not to exceed 5% of the Subcontractor's cost.

E. Net cost of extra Work shall be the actual or pro-rated cost of:

1. Labor, including foreman, at the prevailing rate of wages, contributions and taxes.

2. Materials entering permanently into the Work, including delivery to the site.

3. The ownership or rental cost of construction equipment and expendable tools, pro-rated for the time necessary for the Work.

4. Power and consumable supplies for the operation of power equipment, pro-rated for the time necessary for the Work.

5. Insurance and Bonds.

F. Gross costs shall be net costs plus the mark up allowances described above, such mark up allowances being inclusive, of all cost of superintendence, supervision, engineering, overhead, profit, administrative and site office expenses and all other general expenses.

1.03 APPLICATIONS FOR PAYMENT

A. Except as otherwise indicated, sequence of progress payments for the Contractor shall be regular, and each shall be consistent with previous applications and payments. It is recognized that certain applications involve extra requirements, including initial applications, applications at times of substantial completion, and final payment applications.

B. Payment Application Forms: Use AIA Document G702 and G703 Continuation Sheets; available from Publications Distribution Div., The American Institute of Architects, 1735 New York Ave., N.W., Washington, D.C. 20006 (also available at most local AIA chapter offices).

C. Except as otherwise indicated, complete every entry provided on the form, including notarization and execution by authorized persons. Incomplete applications will be returned by Architect and Owner without action. Entries shall match current data of schedule of values, progress schedules and reports. Listing shall include amounts of fully executed change orders issued prior to first day of the period of construction covered by application. Applications for payment shall include weekly payroll report. Contractor shall furnish to the Owner certified payroll reports for each payroll period with pay request, indicating name craft, social security number and actual hourly rate of wages paid to each workman employed on the project. A certified payroll record is defined as "a payroll record which is attested to by the employer, or corporate officer of such company, or an authorized agent of the employer." A payment request will not be paid until the Owner receives the certified payrolls.

D. Submit one "pencil" copy of each proposed payment application to the architect and owner, for review, not less than seven days prior to formal submissions of application.

E. Submit 4 executed copies of each payment application. Transmit with a transmittal form listing attachments, and recording appropriate information related to application.

F. Breakdown may include a line item for General Conditions. General Conditions shall include the cost of general supervision, trailers, temporary utilities and other general expenses directly related to the project and not considered overhead. The general conditions item shall be billed on monthly progress payments on a percentage of work completed.

1.04 INITIAL PAYMENT APPLICATION

A. The principal administrative actions and submittals which shall precede or coincide with submittal of the Contractor's first payment application can be summarized as follows, but not necessarily by way of limitation.

1. Listing of subcontractors and principal suppliers and fabricators.

2. Schedule of values.

3. Schedule of principal products.

4. Schedule of submittals (preliminary if not final).

5. Copies of acquired building permits and similar authorizations and licenses from governing authorities for current performance of the work.

6. Data needed by Owner to secure related insurance coverages.

7. Performance and Payment Bond.

8. Insurance Certificates.

1.05 PROGRESS PAYMENTS

A. Based upon application for payments submitted to the Architect and the Owner, by the Contractor, on or about the 25th day of each month for the period ending the last day of the previous second month, and Certificate of Payment issued by the Architect and the Owner, the Owner will make progress payments on account of the Contract Sum to the Contractor as follows:

1. On or after the 20th day of each month, the Contractor shall submit to the Architect and Owner a "pencil copy" indicating the previous payment and the proposed amounts for each line item for the current period. After review and approval or changes, the Contractor shall prepare the final billing for presentation to the Architect and Owner.

2. a. Whenever any contract, the total price of which exceeds $100,000, entered into by a State college, for the construction, reconstruction, alteration or repair of any building, structure, facility or other improvement to real property, requires the withholding of payment of a percentage of the amount of the contract, the contractor may agree to the withholding of payments in the manner prescribed in the contract, or may deposit with the State college registered book bonds, entry municipal bonds, State bonds or other appropriate bonds of the State of New Jersey, or negotiable bearer bonds or notes of any political subdivision of the State, the value of which is equal to the amount necessary to satisfy the amount that otherwise would be withheld pursuant to the terms of the contract. The nature and amount of the bonds or notes to be deposited shall be subject to approval by the State college. For purposes of this section, "value" shall mean par value or current market value, whichever is lower.

If the contractor agrees to the withholding of payments, the amount withheld shall be deposited, with a banking institution or savings and loan association insured by an agency of the Federal government, in an account bearing interest at the rate currently paid by such institutions or associations on time or savings deposits. The amount withheld, or the bonds or notes deposited, and any interest accruing on such bonds or notes, shall be returned to the contractor upon fulfillment of the terms of the contract relating to such withholding. Any interest accruing on cash payments withheld shall be credited to the State college.

b. Any contract, the total price of which exceeds $100,000, entered into by a State college involving the construction, reconstruction, alteration, repair or maintenance of any building, structure, facility or other improvement to real property, shall provide for partial payments to be made at least once each month as the work progresses, unless the contractor shall agree to deposit bonds with the State college pursuant to section 1.

c. 1. With respect to any contract entered into by a State college pursuant to section 2 for which the contractor shall agree to the withholding of payments pursuant to section 1, 2% of the amount due on each partial payment shall be withheld by the State college pending completion of the contract.

2. Upon acceptance of the work performed pursuant to the contract for which the contractor has agreed to the withholding of payments pursuant to subsection a. of this section, all amounts being withheld by the State college shall be released and paid in full to the contractor within 45 days of the final acceptance date agreed upon by the contractor and the State

college, without further withholding of any amounts for any purpose whatsoever, provided that the contract has been completed as indicated. If the State college requires maintenance security after acceptance of the work performed pursuant to the contract, such security shall be obtained in the form of a maintenance bond. The maintenance bond shall be no longer than two years and shall be no more than 100% of the project costs.

d. This act shall take effect immediately. This bill supplements the "State College Contracts Law," P.L.1986, c.43 (C.18A:64-52 et seq.), and applies to any State college contract for over $100,000 which involves the construction, reconstruction, alteration or repair of any building, structure, facility or other improvement to real property. Under the provisions of this bill, whenever a contract of this type requires the withholding of payment of a percentage of the amount of the contract, the contractor would have the choice of either agreeing to a retainage deduction from each monthly progress payment, or the contractor could choose to deposit bonds in the amount necessary to satisfy the amount that otherwise would be withheld under the contract. If a contractor chooses a retainage deduction from each monthly payment, then the retainage would be limited to 2% of the amount due on each partial payment. Upon acceptance of the work performed pursuant to the contract for which the contractor has agreed to a retainage deduction, all amounts being withheld by the State college must be paid in full to the contractor within 45 days of the final acceptance date agreed upon by the contractor and the State college. The bill provides that if the State college requires maintenance security after acceptance of the work performed under the contract, the security must be obtained in the form of a maintenance bond, which is required to be no longer than two years and no more than 100% of the project costs. The provisions of this bill are similar to provisions in the "Local Public Contracts Law," P.L.1971, c.198 (C.40A:11-1 et seq.) and the "Public School Contracts Law," P.L.1977, c.114 (C.18A:18A-1 47 et seq.).

3. Upon substantial completion, the retainage shall, upon the Architect/Owner's approval, remain at 2% of the value of work completed. Final release of retained monies will occur only upon the total completion of all punch list and closeout documentation to the satisfaction of the Architect and Owner.

4. For each day's delay in the Contractor's submission of an application for payment acceptable to the Architect and Owner, the Owner may delay one day in making his progress payment.

5. Owner shall make payments within 30 days of receipt of said monthly pay requisition.

1.06 APPLICATION AT TIME OF SUBSTANTIAL COMPLETION

A. Following issuance of certificate of substantial completion on each Contractor's work, and also in part as applicable to prior certificates on portions of completed work as designated, a "special" payment application may be prepared and submitted by Contractor. The principal administrative actions and submittals which shall precede or coincide with such special applications can be summarized as follows, but not necessarily by way of limitation:

1. Occupancy permits and similar approvals or certifications by governing authorities and franchised services, assuring Owner's full access and use of completed work.

2. Warranties, guarantees, maintenance agreements and similar provisions of Contract Documents.

3. Test/adjust/balance records, maintenance instructions, meter readings, start up performance reports, and similar change over information germane to Owner's occupancy, use, operation and maintenance of completed work.

4. Final cleaning of the work.

5. Application for reduction (if any) of retainage, with consent of surety.

6. Advice to Owner on coordination of shifting insurance coverages, including proof of extended coverage

as required.

7. Listing of Contractor's incomplete work, recognized as exceptions to certificate of substantial completion.

1.07 FINAL PAYMENT APPLICATION

A. The administrative actions and submittals which shall precede or coincide with submittal of the Contractor's final payment application can be summarized as follows, but not necessarily by way of limitation.

1. Completion of project closeout requirements.

2. Completion of items specified for completion beyond time of substantial completion, regardless of whether special payment application was previously made.

3. Assurance, satisfactory to Owner and Owner, that unsettled claims will be settled and that work not actually completed and accepted will be completed without undue delay.

4. Transmittal of required project construction records to Owner via the Owner.

5. Proof, satisfactory to Owner and Owner, that taxes, fees and similar obligations of Contractor have been paid.

6. Removal of temporary facilities, services, surplus materials, rubbish and similar elements.

7. Notarized consent of surety for final payment.

1.08 WAIVER OF LIENS

A. Each Contractor, for himself, and for all Subcontractors and material men, agrees that no mechanic's lien or other claim shall be filed or maintained by the Contractor or by any Subcontractor, materialmen, laborer or any other person whatsoever for, or on account of any work performed or materials furnished under this Contract. This agreement shall be an independent contract, and the Contractor shall execute and deliver a separate Waiver of Liens in form and substance satisfactory to the Architect and Owner contemporaneously with the execution of the Owner-Contractor Agreement and before any work is begun at the site.

B. In every subcontract entered into by each Contractor after execution of this Contract or in connection herewith, the Contractor shall incorporate a provision, similar to the foregoing paragraph, to the effect that neither the Subcontractor nor any party acting through or under him shall file or maintain any mechanic's lien or other claim against the Architect or Owner in connection with the Work.

END OF SECTION 01025

SECTION 01100 - PROJECT PROCEDURES

PART 1 - GENERAL

1.01 SPECIAL REQUIREMENTS

A. Schedule: Contractor shall provide a master schedule showing sequencing of work utilizing the CPM method. The Contractor shall supply a schedule with all subcontractor activities, relationships, and durations, utilizing the CPM method via SureTrak/Primavera, Version 3.0, or a Microsoft scheduling software to the Owner on a working version CDrom and coordinate their schedule with the Owner.

- The Contractor is required to update at the end of each month the CPM Schedule based on the percentage completed for each activity on the approved schedule (in concert with the submission of the percentage completed in the monthly proposed schedule of values).
- **The contractor in their bid includes a cost of $500.00 per month for this schedule submission, for the duration of construction (per the milestone schedule in the bidding documents). This only applies to projects in excess of 2 million dollars in base price price. The contractors schedule of values shall include this cost, and can only be billed for upon TCNJ's successful receipt of said schedule. Should any schedule not be received at the end of any month during construction, TCNJ will issue a deduct change order in the amount of $500.00 to the contractor.**

B. Each Contractor shall take all necessary precautions to ensure the safety of all structural elements during all phases of all work. No materials, cranes, trucks or any other construction loads shall be placed on any part of the structure until the Contractor has determined the adequacy of that structure to carry the intended load without damage or overstress.

C. Entrance into, or other use of the building will not be permitted except as may be necessary for the execution of the Work, and shall be subject to the restrictions and instructions of the Owner.

NOTE: any personnel working in any residence hall, including delivery personnel are to have a State Police Background check completed before entering any residence hall. Contractor is to provide the background check for all personnel at the kick off meeting, and/or prior to start of their work. Should a person not have a background check but is on site for a short period of time, said person shall be escorted by a TCNJ project manager/superintendent and /or a designated person that has provided the appropriate background check information. All back ground checks will be forwarded to TCNJ police for review and filing.

NOTE: any personnel working in a residence hall must where a badge with the name of the vendor/contractor they work for and their personal name. This badge must be worn at all times.

D. Routes of ingress and egress to areas where work is being performed shall be subject to the restrictions and instructions of the Owner.

E. Materials shall be moved through the Building using rubber tired vehicles which shall be properly controlled at all times to avoid damage to existing wall, floor or ceiling surfaces.

F. Water damage cannot be tolerated and it is incumbent upon Contractors to take any steps necessary to keep the existing premises dry at all times.

G. Any damage to the new building from heavy equipment, striking the Building or any other damage to any part of the premises shall be repaired at the expense of the Contractors.

H. All welding and cutting shall be performed by qualified and certified welders. Certificates shall be on file with the Contractor prior to commencement of any welding.

I. No work shall start before 8:30am. unless agreed to in advance with the College.

PART 2 - PRODUCTS

NOT APPLICABLE

PART 3 - EXECUTION

3.01 GENERAL

A. Contractors shall perform the work on or about the premises in a careful manner with full consideration to fire protection as required by the National Fire Protection Association Standards, National Board of Fire Underwriters and State and Local Departments having jurisdiction. Fire resistant materials shall be used for temporary enclosures.

B. Chemical extinguishers approved by the Owner shall be provided by the General Contractor during the progress of the work where and asrequired by the Owner, the Local Fire Marshal and the National Board of Fire Underwriters.

C. The Contractor shall maintain an active programof fire prevention to keep workmen fire conscious during the entire life of the Contract. Designate onemember of the organization to execute and coordinate fire control measures of his own organization and that of all subcontractors under his jurisdiction.

D. All sub-contractors shall cooperate with the Contractor in carrying out the above program.

E. Storage of flammable materials will not be permitted in the Building unless written permission is obtained from the Owner. Storage of all such materials shall be the Contractors' responsibility.

F. On-site open burning of rubbish, garbage, trade waste, leaves or plant life is prohibited.

G. Safety Program: The Contractor shall institute a safety program in accordance with OSHA and any local, state, or federal guidelines. The contractor shall name a safety officer to monitor this program and shall submit a safety report at job meetings.

H. Stockpiling: Stockpiling of materials on site will be allowed (but limited due to the limited space on this site). Such materials shall not impair or impede the functioning of the facility. Materials stored on site shall be secured to prevent loss from theft, damage, vandalism or fire. By stockpiling materials on site, the contractor assumes full responsibility for said materials, and shall protect themto the fullest extent possible. Specific locations for stockpiling materials shall be coordinated with the Architect, and Owner.

I. Safety Barriers: The Contractor shall erect safety barriers to deter and prohibit unauthorized access to the construction site; such barriers may take the form of fences and shall be clearly marked with signage prohibiting unauthorized access. The Contractor shall beresponsible for safety barriers within the building. The contractor shall be liable for damages to persons or property due to the construction process if adequate safety measures are not undertaken. The Owner and Architect shall review safety precautions for their adequacy but shall not be held liable for Contractors failure to maintain or provide adequate protection.

J. Sequencing: The Contractor will workwith the Sub-Contractors to sequence the work during the submission of monthly project schedules. Contractors shall endeavor to coordinate their work efforts with the Owner's requirements. Interruptions of utility services shallbe coordinated with the Architect, and Owner, but in no instance shall last longer than 2 hours.

K. Limited staging and on site parking will be providedby General Contractor. The Contractor willcoordinate parking areas with all the subcontractors and TCNJ.

1. Parking will be available at Carlton Avenue. Contractor will provide shuttle service to and fromthe site.

2. Contractor will be permitted to have vehicles on site with in the construction fencing only. Contractor is to provide stone in all parking areas on site to prevent the buildup of ruts and mud, thus minimizing the amount of mud leaving the site and being left behind on TCNJ roads.

L. Site Utilities: Electric power and water are available on site. Toilet facilities will be made available by the Contractor. These facilities shall remain clean by the Contractors throughout the course of the project. The Contractors shall repair and/or replace any damaged fixtures, partitions, etc. The Electrical Sub-Contractor shall tie in a temporary power panel (or panels as required) for all trades to use during construction. Interruption of building services shall not occur without prior consent and coordination by the Owner and Owner.

1. Provide portable toilets for all construction personnel.

M. Construction Lighting: The Electrical Sub-Contractor shall run sufficient strings and fixtures to maintain a 50 foot-candle/sq.ft. intensity of light throughout the project areas.

N. Dumpster Location and Cleanup: The Architect and Owner shall coordinate the dumpster location with the Contractors. The Contractor shall be responsible for obtaining, maintaining, and disposing of dumpsters, and shall maintain clean work areas throughout the course of the project.

- Contractor is to provide adequate manpower during the entire course of the project to maintain the site in a clean, neat and professional manner. At a minimum the contractor is to clean the entire site twice per week (on different days) by picking up all debris in and around the site. Sweeping the entire building daily is required once the floor slabs are in place. Contractor is to place garbage cans on each floor minimum 3 per floor in designated locations to assist in keeping the site clean. The owner will not tolerate a building project that is not maintained in a professional manner at all times.

3.02 PROGRESS MEETINGS

A. Progress Meetings shall be held bi-weekly at the job site at a regular time and day mutually agreed upon. The frequency may be changed by the Architect or Owner to reflect current conditions. The Contractors, those of his/their subcontractors concerned with current progress or with scheduling of future progress, the Architect, the Owner, and the Owner shall each be represented at these job meetings by persons familiar with the details of the work and authorized to conclude matters relative to work progress, establishment of progress schedules, etc., as may be necessary to expedite completion of the work.

B. The Contractors and his/their subcontractors attending these meetings shall present complete and definite reports as to the status of their respective work, conditions of product and equipment manufacturer, labor availability, productivity and cooperation, shipping data, time of completion, sequence of the work, safety program, and any other information bearing upon the execution of the Contract or subcontract. For the Owner's convenience the Owner will chair the meetings.

3.03 MONTHLY REPORTS

A. The Contractor is to provide TCNJ a brief monthly status report on the last working day of each month dividing the status of the project into the following categories (report must be complete in all respects, piecemeal submissions will not be accepted):
   a. Project overview
   b. Financial status
   c. Updated project schedule
   d. Change order request log
   e. Submittal log
   f. RFI log
   g. Owner/Architect issues that need immediate resolution

h. Order/delivery issues

B. The Contractor is to provide TCNJ with this monthly report, and include in their bid a cost of $500.00 per month for all projects in excess of 2 million dollars base bid price for the duration of the construction period as noted in the bidding milestone schedule. This total cost will be listed in the contractor's schedule of values and can be billed for on a monthly basis only if said report is received in whole as noted above. Should TCNJ not receive said complete report a deduct change order will be issued to the contractor for $500.00 for that month.

END OF SECTION 01100

SECTION 01300 – SUBMITTALS AND SUBSTITUTIONS

PART 1 – GENERAL

1.1 PROGRESS SCHEDULE / COORDINATION DRAWINGS

A. The Contractor's schedule, shall coordinate with all trades to produce a coordinated CPM via Suretrak/Primavera version 3.0 or a Microsoft scheduling program schedule indicating the start and completion dates for each portion of the work as defined by the schedule of values, with the total time as defined by the contract time and milestone dates as set forth in these specifications. The Contractor's CPM schedule shall be submitted in electronic format (Suretrak 3.0 or a Microsoft Scheduling program) to and reviewed by the Owner and Architect prior to first application for payment. Any revisions or additional information requested by the Owner or Architect shall be provided. (No payment shall be made to any Contractor not providing a schedule that reflects their entire work).

- Also refer to Section 01100-1 – Project Procedures.

B. The Contractor shall revise the progress schedule on a monthly basis as the work progresses reflecting therein any delays, including those not within the Contractor's control, or accelerations in the progress of the work. The progress schedule, as revised for any weekly period, shall be discussed at the bi-weekly job meetings with the, Owner, the Architect, and the Contractor and the major trades in order to insure that the percentage of actual completion of any portion of the work as called for in the progress schedule for that bi-weekly period is attained. Monthly updates to the progress schedule shall be made prior to application for payment.

C. Should any delay occur in the progress of the work on any portion thereof, the Contractor shall be required to implement all necessary measures to accelerate the construction, to meet the percentages of completion dictated by the progress schedule on the applicable dates, without additional cost to the Owner.

1.2 SHOP DRAWINGS, PRODUCT DATA AND SAMPLES

A. Shop drawings, product data and samples will not be processed by the Owner and/or Architect until the list of subcontractors, material suppliers and fabricators is submitted as required under Paragraph 3.12 of the General Conditions.

- The successful Contractor shall submit their list of proposed substitutions with in 20 calendar days of the Contract Award.
- The Architect shall be compensated on an hourly basis for review of all shop drawings or samples that do not meet the requirements of the contract documents after two submissions. The compensation shall be deducted from the contractors contract via a deduct change order, or other means that both parties agree to.

B. Coordinate preparation and processing of submittals with performance of the work so that work will not be delayed by submittals. Allow two weeks for review/approval by the Architect for the approval process. Allow additional time if processing must be delayed to permit coordination with subsequent submittals with others.

C. Provide permanent marking on each submittal to identify Project, date, Contractor, subcontractor, submittal name, Specification section, drawing reference, and similar information to distinguish it from other submittals. Show Contractor's executed review and approval marking and provide space (5" x 7") for Architect's Action marking and space for Owner's review marking. Package each submittal appropriately for transmittal and handling. Submittals received, which are lacking the above information, will be returned without action. Submittals, which are received from sources other than through Contractor's office, will be returned without action.

D. Each submission shall be complete, with all options clearly marked and with all components required for the assembly fully described and detailed. Submissions missing important information will be returned unchecked.

E. Transmittal Form: Submittals shall be accompanied by a transmittal form. Provide Contractor's certification on form, ready for execution, stating that information submitted complies with requirements of contract documents.

- Transmit all submittals and shop drawings to the Architect or Engineer with a copy of the transmittal to the Owner.

F. Except as otherwise indicated in individual work sections, comply with requirements specified herein for each indicated category of submittal. Provide and process intermediate submittals, where required between initial and final, similar to initial submittals.

G. Maintain returned final set of samples at project site, in suitable condition and available for quality control comparisons by Architect, and by Owner.

H. Do not proceed with installation of materials, products or systems until final copy of applicable shop drawings, product data and samples are in possession of Installer.

I. Provide newly prepared shop drawings, on reproducible sheets, with graphic information at accurate scale, with company name of preparer indicated. Show dimensions and note which are based on field measurement. Identify materials and products in the work shown. Indicate compliance with standards, and special coordination requirements. Do not allow shop drawing copies without appropriate final Action markings by Architect to be used in connection with the work.

1. Initial and Intermediate Submittals: One correctable translucent reproducible print and 5 blue line or black line prints; reproducible will be returned.
2. Final Submittal: 6 prints, plus 3 additional prints where required for maintenance manuals; 4 will be retained and remainder will be returned, one of which shall be marked up and maintained by Contractor as "Record Document".
3. Electronic submittals are acceptable in AutoCad format only. Contractor shall be responsible for printing and distribution of multiple copies as required.

J. Collect required product data into one submittal for each unit of work or system, and mark each copy to show which choices and options are applicable to the project. Include manufacturer's standard printed recommendations for application and use, compliance with standards, application of labels and seals, notation of field measurements that have been checked, and special coordination requirements. Maintain one set of product data for each submittal at project site, available for reference by Architect and others.

K. Submittals will be accepted from the Contractor only. Submittals received from other entities will be returned without review or action.

1. Submittals received without a transmittal form will be returned without review or action.
2. Transmittal form: Use a form matching the sample form attached to this section. Include the following:
   a. List of deviations.
   b. The Contractor's certification signature.
3. Fill out a separate transmittal form for each submittal; also include the following:
   a. Other relevant information.
   b. Request for additional information.

L. Do not submit product data, or allow its use on the project, until compliance with requirements of Contract Documents has been confirmed by Contractor. Submittal is for information and record unless otherwise indicated. Initial submittal is final submittal unless returned promptly by Architect marked with an Action that indicates and observed noncompliance. Submit 6 copies, plus 3 additional copies, which will be returned, where required for maintenance manuals.

1. Electronic submittals are acceptable in 8 ½" x 11" format only.

M. Provide three (3) samples identical with final condition of proposed materials or products for the work. Include range samples, not less than 3 units, where unavoidable variations between units of each set. Provide full set of optional samples where Architect's selection is required. Prepare samples to match Architect's sample where so indicated. Include information with sample to show generic description, source or products name and manufacturer, limitations, and compliance with standards. Samples are submitted for review and confirmation of color, pattern, texture and kind by Architect. Architect will not test samples, except as otherwise indicated, for compliance with other requirements, which are therefore the exclusive responsibility of the Contractor.

N. Upon receipt of a signed copy of the Architects' Waiver form, electronic copies of CAD drawings of the Contract Documents will be provided by the Architect for Contractor's use in preparing submittals. Copy of Waiver form is attached.

O. Product Selection Procedures: Procedures for product selection include the following:

1. Product: Where Specification paragraphs or subparagraphs titled "Product" name a single product and manufacturer, provide the named product or an equivalent.

2. Manufacturer/Source: Where Specification paragraphs or subparagraphs titled "Manufacturer" or "Source" name single manufacturers or sources, provide a product of the manufacturer or source that complies with requirements, or an equivalent.

3. Products: Where Specification paragraphs or subparagraphs titled "Products" introduce a list of names of both products and manufacturers, provide one of the products listed that complies with requirements, or an equivalent. Comply with provisions of "Product Options and Substitutions," Section 1.4 of Division 1300 of these specifications when submitting an equivalent product.

4. Manufacturers: Where specification paragraphs or subparagraphs titled "Manufacturers" introduce a list of manufacturers' names, provide a product by one of the manufacturers listed, or an equivalent, that complies with requirements. Comply with provisions of "Product Options and Substitutions," Section 1.4 of Division 1300 of these specifications when submitting an equivalent product.

5. Product Options: Where Specification paragraphs or subparagraphs refer to "Product Options and Substitutions," indicate that size, profiles, and dimensional requirements on Drawings are based on a specific product or system; provide the specific product or system or an equivalent product or system by another manufacturer. Comply with provisions of "Product Options and Substitutions," Section 1.4 of Division 1300 of these specifications when submitting an equivalent product.

6. Basis of Design Products: Where Specification paragraphs or subparagraphs titled "Basis-of-Design Products" introduce or refer to a list of manufacturers' names, provide either the specified product or an equivalent. Drawings and Specifications indicate sizes, profiles, dimensions and other characteristics that are based on the product names. Comply with the provisions of "Product Options and Substitutions," Section 1.4 of Division 1300 of these specifications when submitting an equivalent product.

1.3 MISCELLANEOUS SUBMITTALS

A. Miscellaneous submittals related directly to the work include warranties, maintenance agreements, workmanship bonds, survey data and reports, physical work records, quality testing and certifying reports, copies of industry standards, record drawings, field measurement data, operating and maintenance materials, overrun stock, and similar information, devices and materials applicable to the work and not processed as shop drawings, product data or samples.

B. Refer to sections for specific general requirements on warranties, product/workmanship bonds, and maintenance agreements. In addition to copies desired for Contractor's use, furnish 2 executed copies, except furnish 3 additional copies where required for maintenance manuals.

C. For the Owner's records, submit copies of permits, licenses, certifications, inspection reports, releases, jurisdictional settlements, notices, receipts for fee payments, judgments, and similar documents, correspondence and records established in conjunction with compliance with standards and regulations bearing upon performance of the work.

1.4 PRODUCT OPTIONS AND SUBSTITUTIONS

A. DEFINITIONS

1. Products: Items purchased for incorporating into the Work, whether purchased for Project or taken from previously purchased stock. The term "product" includes the terms "material," "equipment," "system," and terms of similar intent.

   a. Named Products: Items identified by manufacturer's product name, including make or model number or other designation, shown or listed in manufacturer's published product literature, that is current as of date of the Contract Documents.
   b. New Products: Items that have not previously been incorporated into another project or facility, except that products consisting of recycled-content materials are allowed, unless explicitly stated otherwise. Products salvaged or recycled from other projects are not considered new products.
   c. Equivalent Product: Product that is demonstrated and approved through submittal process, or where indicated as a product substitution, to have the indicated qualities related to type, function, dimension, in-service performance, physical properties, appearance, and other characteristics that equal or exceed those of specified product.

2. Substitutions: Changes in products, materials, equipment, and methods of construction from those required by the Contract Documents and proposed by Contractor.
3. Basis-of-Design Product Specification: Where a specific manufacturer's product is named and accompanied by the words "basis of design," including make or model number or other designation, to establish the significant qualities related to type, function, dimension, in-service performance, physical properties, appearance, and other characteristics for purposes of evaluating comparable products of other named manufacturers.
4. Manufacturer's Warranty: Preprinted written warranty published by individual manufacturer for a particular product and specifically endorsed by manufacturer to Owner.
5. Special Warranty: Written warranty required by or incorporated into the Contract Documents, either to extend time limit provided by manufacturer's warranty or to provide more rights for Owner.

B. General Requirements:

1. The requirements for substitutions do not apply to specified Contractor options on products and construction methods. Revisions to Contract Documents, where requested by Owner or Architect are changes, not substitutions. Contractor's determination of and compliance with governing regulations and orders issued by governing authorities do not constitute substitutions and do not constitute a basis for change orders. Otherwise, Contractor's requests for changes in products, materials, and methods of construction required by Contract Documents are considered requests for substitutions, and are subject to requirements hereto.
2. To the greatest extent possible, provide products, materials and equipment of a singular generic kind and from a single source.
3. Where more than one choice is available as options for Contractor's selection of a product or material, select an option that is compatible with other products and materials already selected. Total

compatibility among options is not assured by limitations within Contract Documents, but shall be provided by Contractor. Compatibility is a basic general requirement of product/material selections.

4. Any and all contractor substitutions that require additional work by other trades not specifically called for in the documents shall be paid for by the contractor requesting the substitution if any other trade increase is required.
5. Requested substitution offers Owner a substantial advantage in cost, time, energy conservation, or other considerations, after deducting additional responsibilities Owner must assume. Owner's additional responsibilities may include compensation to Architect for redesign and evaluation services, increased cost of other construction by Owner, and similar considerations.

C. Submittals: Submit 6 copies, utilizing Substitution Request Form, CSI Form 13.1.A, fully identified for product or method being requested for substitution, including related specification section and drawing numbers, and fully documented to show compliance with requirements for substitutions. Include product data/drawings, description of methods, samples where applicable, Contractor's details comparison of significant qualities between specified item and proposed substitution, statement of effect on construction time and coordination with other affected work and contractors, cost information or proposal, warranty information, compatibility with other work, approval of all authorities having jurisdiction, and Contractor's statement to the effect that proposed substitution will result in overall work equal to or better than work originally indicated.

D. Contractor's options for selecting products are limited by Contract Documents requirements, and governing regulations. Required procedures include, but are not necessarily limited to, the following for various indicated methods or specifying:

1. Single product/manufacturer name; provide product indicated or equivalent, except advise Architect before proceeding, where known that named product is not a feasible or acceptable selection.
2. Two or more product/manufacturer names; provide one of the named products or equivalent, at Contractor's option; but excluding products which do not comply with requirements. Advise Architect before proceeding.
3. Equivalent; where named products in Specifications text are accompanied by the term "or equivalent", or other language of similar effect, comply with those Contract Documents provisions concerning substitutions for obtaining Architect's approval of equivalent product.
4. Named, except as otherwise indicated, is defined to mean manufacturer's name for product, as recorded in published product literature, of latest issue as of date of Contract Documents. Refer requests to use products of a later or earlier model to Architect for acceptance before proceeding.
5. Where compliance with an imposed standard, code or regulation is required, selection from among products that comply with requirements including those standards, codes and regulations, is Contractor's option.
6. Provide products which comply with specific performances indicated, and which are recommended by manufacturer, in published product literature or by individual certification, for application indicated. Overall performance of a product is implied where product is specified for specific performance.
7. Provide products that have been produced in accordance with prescriptive requirements, using specified ingredients and components, and complying with specified requirements for mixing, fabricating, curing, finishing, testing and similar operations in manufacturing process.
8. Where matching of an established sample is required, final judgment of whether a product proposed by Contractor matches sample satisfactorily is Architect's judgment. Where no product within specified cost category is available, which matches sample satisfactorily and complies with requirements, comply with Contract Document provisions concerning substitutions for selection of a matching product outside established cost category or not complying with requirements.
9. Where specified product requirements include "...as selected from manufacturer's full range of colors, patterns, textures..." or words of similar effect, the selection of manufacturer and basic product data is to comply with requirements of the Contract, and selection shall be from the full range of products within the requirements. Where specified product requirements include "... as the industry...", or words to that effect, selection of product complying with requirements, is Architect's selection, including designation of manufacturer, where necessary to obtain desired color, pattern or texture.

E. Substitutions may be permitted by the Architect, if, in his opinion, the requirements of the proposed substitution comply with the requirements specified for the material, article or piece of equipment; however, the Architect is not required to permit substitution pursuant to the case of Whitten Corporation vs. Paddock, Incorporated, United States District Court, Massachusetts, April 12, 1974, affirmed by the Federal First Circuit Court, December 14, 1974.

F. After award of contract, the Contractor may submit substitutes to the Architect for review, fully documented and certified, and accompanied by a proposal for a reduction in the Contract Sum.

G. Contractor's request for substitution will be received and considered when extensive revisions to Contract Documents are not required and changes are in keeping with general intent of Contract Documents; when timely, fully documented and properly submitted; and when one or more of following conditions is satisfied, all as judged by Architect. Otherwise, requests will be returned without action except to record noncompliance with these requirements.

1. Where request is directly related to an "equivalent" clause or other language of same effect in Contract Documents.
2. Where required product, material or method cannot be provided within Contract Time, but not as a result of Contractor's failure to pursue the work promptly or coordinate various activities properly.
3. Where required product, material or method cannot be provided in a manner which is compatible with other materials of the work, or cannot be properly coordinated therewith, or cannot be warranted (guaranteed) as required, or cannot be used without adversely affecting Owner's insurance coverage on completed work, or will encounter other substantial noncompliances which are not possible to otherwise overcome except by making requested substitution, which Contractor thereby certifies to overcome such incompatibility, uncoordination, nonwarranty, noninsurability or other noncompliance as claimed.
4. Where substantial advantage is offered Owner, in terms of cost, time or other valuable considerations, after deducting offsetting responsibilities Owner may be required to bear, including additional compensation to Architect for redesign and evaluation services, increased cost of other work by Owner or separate Contractors, and similar considerations.

H. Contractor's submittal of, and Architect's acceptance of, shop drawings, product data or samples which indicate work not complying with requirements of Contract Documents, does not constitute an acceptable and valid request for, nor approval of, a substitution.

I. QUALITY ASSURANCE

Compatibility of Options: If Contractor is given option of selecting between two or more products for use on Project, product selected shall be compatible with products previously selected, even if previously selected products were also options.

1. Each contractor is responsible for providing products and construction methods compatible with products and construction methods of other contractors.
2. If a dispute arises between contractors over concurrently selectable but incompatible products, Architect will determine which products shall be used.

J. EQUIVALENT PRODUCTS

Where products or manufacturers are specified by name, Contractor must submit the following, in addition to other required submittals, to obtain approval of an unnamed product proposed as an equivalent:

1. Evidence that the proposed product does not require extensive revisions to the Contract Documents, that it is consistent with the Contract Documents and will produce the indicated results, and that it is compatible with other portions of the Work.

2. Detailed comparison of significant qualities of proposed product with those named in the specifications. Significant qualities include attributes such as performance, weight, size, durability, visual effect, and specific features and requirements indicated.
3. Evidence that proposed product provides specified warranty.
4. List of similar installations for completed projects with project names and addresses and names and addresses of architects and owners, if requested.
5. Samples, if requested.

1.5 OPERATION AND MAINTENANCE INSTRUCTIONS AND EQUIPMENT WARRANTIES

A. The Contractor shall orient and instruct the responsible maintenance personnel designated by the Owner in the Operation of all equipment and shall provide the maintenance personnel with pertinent literature and operational manuals for all equipment. Date and time of demonstrations shall be mutually agreed upon with the Owner. Provide qualified personnel for as long as necessary to fully orient and instruct the Owner. Contractor shall videotape instruction session and provide owner with completed video.

B. The manuals shall be submitted in (quadruplicate) 3-ring loose-leaf type binders to the Architect for approval with all additional information that the Architect may request and considers necessary for the proper servicing and maintenance of all equipment. Manuals are to include plain paper copies of approved shop drawings and catalog cuts. The quality of the copies may be subject to approval by the Architect. Upon completion and approval, 3 copies will be forwarded to the Owner and one copy retained by the Architect.

C. Manuals shall include no less than the following:
1. Operating Procedures:
   a. Typewritten procedures indicating each mode of operation of each piece of equipment or system. Procedures shall indicate the status of each component of a system in each operating mode.
   b. Procedures shall indicate names, symbol numbers, valve tags, circuit numbers, schematic control and wiring diagrams, locations of thermostats, manual starters, control cabinets, and other controls of each system.
   c. Emergency shutdown procedures for each piece of equipment or system, both automatic and manual as appropriate.
2. Maintenance Schedule: Typewritten schedule describing manufacturer's recommended schedule of maintenance and maintenance procedures.
3. Catalog cuts and shop drawings:
   a. Catalog cuts shall clearly indicate the exact model and type of each piece of equipment installed in the Project, including all options provided.
   b. Catalog cuts shall fully describe equipment including physical, electrical, mechanical and other characteristics, performance characteristics and installation or erection diagrams.
   c. Catalog cuts shall indicate spare part numbers and name, address and telephone number of local representative or service department.
4. Typewritten list of all subcontractors on the Project including name, address, telephone number and responsibility on the Project.
5. Manuals shall be indexed with dividers indicating each system or piece of equipment.
6. Warranties, permits, inspection stickers/approvals and Certificate of Occupancy are to be included.

D. Required equipment warranties shall be submitted in three copies to the Architect.

E. The Contractor shall video tape all instructional sessions and demonstrations and provide the Owner with a copy of the videotape at the end of all demonstrations.

PART 2 - PRODUCTS
NOT APPLICABLE
PART 3 - EXECUTION

3.1 ACTION ON SUBMITTALS

A. One copy of all submissions will be returned to the Contractor for his files. The Contractor shall mark up other copies so as to conform with the copy returned to him and forward them to all interested Contractors, Subcontractors, and Suppliers.

B. The Architect will review and stamp submitted shop drawings in one of the following ways (the actual stamp may be different; below language is shown for an example only)
1. "No Exceptions Taken": Approved.
2. "Make Corrections Noted": Approved, provided the work complies with corrections marked on the submittal.
3. "Revise and Resubmit": Do not commence work of this submittal. Revise and resubmit or prepare a new submittal; comply with notations marked on submittal.
4. "Rejected": Fundamentally not in compliance. Prepare a new submittal. No notations or comments made.

C. Work shall be executed in accordance with "Approved", "Approved As Noted", or "Resubmit for Record" stamp only.

D. Architect's review of shop drawings/submittals will constitute checking for general arrangement only, and shall not relieve the Contractor of responsibility for complete compliance with Drawings and Specifications. Contractor shall be responsible for quantities and dimensions to assure a proper fit under field conditions.

3.2 DISTRIBUTION

A. Provide additional distribution of submittals, not included in foregoing copy submittal requirements, to subcontractors, suppliers, fabricators, installers, governing authorities and others as necessary for proper performance of the work. Include such additional copies in transmittal to Architect where required to receive Action marking before final distribution. Show such distributions on transmittal forms.

3.3 COLOR SELECTIONS

A. All colors for all finished surfaces and materials will be selected or approved by the Architect. The color selections will be made at **one time** to provide a complete and coordinated color schedule which, upon acceptance of the Owner, will be provided to the Contractor. Any and all specific color selections for materials not noted on drawings or in specification shall be chosen by Architect after submittal of samples.

B. It is imperative that **all** color information be submitted to the Architect by the Contractor before color selections can be made. If any color selection information is not available when colors are needed to meet the project schedule, the Architect will select colors from one of the named manufacturers in the Specifications, and the Contractor will be required to exactly match that color. A claim for delay will not be accepted if the color schedule is late due to the failure of the Contractor to provide the Architect with all required color information, nor will an extra be entertained if the selected color is not available from the manufacturer the Contractor intended to use but neglected to submit.

C. The Contractors are reminded of the requirement to declare all substitutions within 20 days of execution of their Contract as specified.

END OF SECTION 01300

SECTION 01310 - QUALITY CONTROL

PART 1 - GENERAL

1.01 TRADESMEN AND WORKMANSHIP

A. Each Contractor shall ensure that tradesmen performing work at site are skilled and knowledgeable in methods and craftsmanship needed to produce required quality levels for workmanship in completed work. Remove and replace work which does not comply with workmanship standards as specified and as recognized in the construction industry for applications indicated. Remove and replace other work damaged or deteriorated by faulty workmanship or its replacement.

B. In certain instances, specification text requires that specific work be assigned to specialists or expert entities, who shall be engaged for performance of those units of work. These shall be recognized as special requirements over which Contractor has no choice or option. These assignments shall not be confused with, and are not intended to interfere with, normal application of regulations, union jurisdictions and similar conventions. One purpose of such assignments is to establish which party or entity involved in a specific unit of work is recognized as "expert" for indicated construction processes or operations. Nevertheless, final responsibility for fulfillment of entire set of requirements remains with Contractor.

1.02 INSPECTION, TESTS AND REPORTS

A. Required inspection and testing services are intended to assist in determination of probable compliances of the work with requirements, but do not relieve any Contractor of responsibility for those compliances, or for general fulfillment of requirements of Contract Documents. Specified inspections and tests are not intended to limit any Contractor's quality control program. Afford reasonable access to agencies performing tests and inspections.

B. Contractors are responsible for all testing associated with their work (foundations, soils compaction, concrete, steel, roof material testing etc.) and shall submit the name of their proposed testing agency within 15 days of Notice-to-Proceed. Each Contractor is responsible to coordinate the activities of the testing agency to assure that work is tested prior to being covered up or other activities associated to the work begin.

1.03 ROOF DRAIN TESTING

A. Pre-Construction Testing: Prior to the start of any work on the roof, the Contractor shall water-flow test all roof drains (5 minutes at each drain), to determine if any full or partial drain clogs exist in the drainage system.

1. The Owner shall have a representative at the test.
2. The results of the testing shall be reported to the Owner, in writing, prior to the start of work.
3. The Owner will be responsible for correction of any drain-age problems reported by the Contractor prior to the start of work.
4. Any drains, piping or other components, whether exposed, concealed, below grade, etc., found to be clogged after the start of construction, and not reported to the Owner prior to the start of construction, shall be cleared, repaired or replaced as required to restore full drainage capacity. All work shall be performed by the Contractor at no additional cost to the Owner, including patching, repair or replacement of any materials, finishes, landscaping, etc., disturbed in gaining access to drainage components.

B. Post-Construction Testing: When all work reaches substantial completion, the Contractor shall water-flow test all roof drains (5 minutes at each drain), to determine if any full or partial drain clogs exist in the drainage system.

1. The Owner shall have a representative at the test.

2. Report the results of testing to the Owner in writing prior to preparation of the final punchlist inspection.

3. Any drains, piping or other components, whether exposed, concealed, below grade, etc., found to be clogged shall be cleared, repaired or replaced as required to restore full drainage capacity. All work shall be performed by the Con-tractor at no additional cost to the Owner, including patching, repair or replacement of any materials, finishes, landscaping, etc., disturbed in gaining access to drainage components.

1.04 ROOF DRAIN PROTECTION

A. Contractor is to make every effort to prevent materials from entering roof drains. Contractor is to install roof rain filters prior to removal of any roof materials.

B. All debris is to be cleaned away from drains at the end of each day.

PART 2 - PRODUCTS

2.01 ROOF DRAIN FILTERS

A. Tiddy Gutter DF100001 Roof Drain Foam Filter or Equal.

PART 3 - EXECUTION

3.01 REPLACEMENT OF WORK

A. The Contractor shall, within 24 hours after rejection of Work, remove all materials and equipment so rejected and immediately replace said Work, at his cost, to the satisfaction of the Architect. Should the Work of the Owner or other Contractors be damaged by such removal or replacement, the Contractor shall reimburse the Owner or other Contractors for all cost incurred for correcting said damage.

3.02 EXAMINATION

A. Existing Conditions: The existence and location of site improvements, utilities, and other construction indicated as existing are not guaranteed. Before beginning work, investigate and verify the existence and location of mechanical and electrical systems and other construction affecting the Work.

1. Before construction, verify the location and points of connection of utility services.

B. Existing Utilities: The existence and location of underground and other utilities and construction indicated as existing are not guaranteed. Before beginning sitework, investigate and verify the existence and location of underground utilities and other construction affecting the Work.

1. Before construction, verify the location and invert elevation at points of connection of sanitary sewer, storm sewer, and water-service piping; and underground electrical services.
2. Furnish location data for work related to Project that must be performed by public utilities serving Project site.

C. Acceptance of Conditions prior to work starting: Examine substrates, areas, and conditions, with Installer or Applicator present where indicated, for compliance with requirements for installation tolerances and other conditions affecting performance. Record observations.

1. Written Report: Where a written report listing conditions detrimental to performance of the Work is required by other Sections, include the following:

a. Description of the Work.
b. List of detrimental conditions, including substrates.
c. List of unacceptable installation tolerances.
d. Recommended corrections.

2. Verify compatibility with and suitability of substrates, including compatibility with existing finishes or primers.
3. Examine roughing-in for mechanical and electrical systems to verify actual locations of connections before equipment and fixture installation.
4. Examine walls, floors, and roofs for suitable conditions where products and systems are to be installed.
5. Proceed with installation only after unsatisfactory conditions have been corrected. Proceeding with the Work indicates acceptance of surfaces and conditions.

3.03 PREPARATION

A. Existing Utility Information: Furnish information to local utility and Owner that is necessary to adjust, move, or relocate existing utility structures, utility poles, lines, services, or other utility appurtenances located in or affected by construction. Coordinate with authorities having jurisdiction.

B. Existing Utility Interruptions: Do not interrupt utilities serving facilities occupied by Owner or others unless permitted under the following conditions and then only after arranging to provide temporary utility services according to requirements indicated:

1. Notify Owner not less than two days in advance of proposed utility interruptions.
2. Do not proceed with utility interruptions without Owner's/Owner's written permission.

C. Field Measurements: Take field measurements as required to fit the Work properly. Recheck measurements before installing each product. Where portions of the Work are indicated to fit to other construction, verify dimensions of other construction by field measurements before fabrication. Coordinate fabrication schedule with construction progress to avoid delaying the Work.

D. Space Requirements: Verify space requirements and dimensions of items shown diagrammatically on Drawings.

E. Review of Contract Documents and Field Conditions: Immediately on discovery of the need for clarification of the Contract Documents, submit a request for information to Architect. Include a detailed description of problem encountered, together with recommendations for changing the Contract Documents.

3.04 CONSTRUCTION LAYOUT

A. Verification: Before proceeding to lay out the Work, verify layout information shown on Drawings, in relation to existing conditions and dimensions. If discrepancies are discovered, notify Architect and Owner promptly.

3.05 INSTALLATION

A. General: Locate the Work and components of the Work accurately, in correct alignment and elevation, as indicated.

1. Make vertical work plumb and make horizontal work level.
2. Where space is limited, install components to maximize space available for maintenance and ease of removal for replacement.

B. Comply with manufacturer's written instructions and recommendations for installing products in applications indicated.

C. Install products at the time and under conditions that will ensure the best possible results. Maintain conditions required for product performance until Substantial Completion.

D. Conduct construction operations so no part of the Work is subjected to damaging operations or loading in excess of that expected during normal conditions of occupancy.

E. Tools and Equipment: Only use the best quality tools and equipment with proper attenuations for the latest acceptable sound levels.

F. Anchors and Fasteners: Provide anchors and fasteners as required to anchor each component securely in place, accurately located and aligned with other portions of the Work.

1. Mounting Heights: Where mounting heights are not indicated, mount components at heights directed by Architect.
2. Allow for building movement, including thermal expansion and contraction.

G. Joints: Make joints of uniform width. Where joint locations in exposed work are not indicated, arrange joints for the best visual effect. Fit exposed connections together to form hairline joints.

H. Hazardous Materials: Use products, cleaners, and installation materials that are not considered hazardous.

END OF SECTION 01310

SECTION 01320 - TEMPORARY FACILITIES

PART 1 - GENERAL

1.01 DESCRIPTION OF REQUIREMENTS

A. Specific administrative and procedural minimum actions are specified in this section, as extensions of provisions in General Conditions and other Contract Documents. Nothing in this section is intended to limit types and amounts of temporary work required, and no omission from this section will be recognized as an indication that such temporary activity is not required for successful completion of the work and compliance with requirements of Contract Documents.

B. Each Contractor is specifically assigned certain responsibilities for temporary facilities to be used by all Contractors, other entities at the site, the Owner's work forces and other personnel including occupants of the project, the Owner, the Architect, test agencies, personnel of governing authorities, and similar entities and personnel authorized to be at the project site during construction. In general, each Contractor is assigned the responsibilities for installation, operation and removal of each temporary facility which is related by recognized trades to its scope of contract work; and, except as otherwise indicated, each is responsible for costs and use charges associated therewith, including fuel, power usage, water usage and similar usage costs. The Contractor is responsible for temporary facilities not related to any other Contractor's scope of contract work and not otherwise specifically assigned, as designated by the Architect.

C. No costs or usage charges for temporary facilities are chargeable to the Owner, nor can any Contractor's cost or usage charges for temporary facilities be accepted as the basis for a change order extra. The total costs and usage charges for temporary facilities are included, collectively, in the Contract Amounts.

1.02 GENERAL REQUIREMENTS

A. Each Contractor shall provide and operate all hoists, cranes, helicopters and furnish and erect all ladders and scaffolding required by him and his subcontractors, constructed to afford proper protection to craftsmen, their Work and other Work in progress and previously executed.

1.03 JOB CONDITIONS

A. Each Contractor shall establish and initiate use of each temporary facility at time first reasonably required for proper performance of the total work of project. Terminate use and remove facilities at earliest reasonable time, when no longer needed or when permanent facilities have, with authorized use, replaced the need.

B. Each Contractor shall install, operate, maintain and protect temporary facilities in a manner and at locations that will be safe, nonhazardous, sanitary, protective of persons and property, and free of deleterious effects.

1.04 ENVIRONMENTAL PROTECTION

A. Each Contractor shall provide facilities, establish procedures, and conduct construction activities in a manner that will ensure compliance with environmental and other regulations controlling construction activities at project site. The Contractor shall designate one person, the Construction Superintendent or other, to enforce strict discipline on activities related to generation of wastes, pollution of air/water/soil, generation of noise, and similar harmful or deleterious effects which might violate regulations or reasonably irritate persons at or in vicinity of project site. Anti-pollution measures required by D.E.P., as applicable are to be followed.

1.05 SECURITY

A. The Contractor shall maintain complete security on the site at all times during and outside of normal working hours to protect the Work and all field offices, and to secure the area of construction by restricting all trespassers.

- This means locking the doors and/or gates. A guard is not required.

1.06 TEMPORARY CONSTRUCTION FACILITIES

A. Where mud, snow, ice or other hazardous conditions exist in the purview (Scope of Work) of any Sub Contractor, the Contractor shall remove the hazards immediately and replace with suitable material for the other contractors use. If the Owner is compelled to remove the hazards with their own forces due to inaction by the Contractor, then that Contractor will be back-charged for the work performed by the Owner.

B. No welding, cutting by torch, or Work utilizing or causing flammable waste shall be done unless adequate fire protection is provided and maintained for the duration of the Work in the area of operations.

1.07 DEBRIS CONTROL (Refer to Section 01524 for further delineation)

A. The Contractor shall be responsible for daily cleaning up of spillages and debris resulting from his operations and from those of his Subcontractors; and shall be responsible for complete removal and disposition of hazardous and toxic waste materials. The Contractor shall provide containers at grade, sufficient for the depositing of nonhazardous/nontoxic waste materials, and shall remove such waste materials from project site at least weekly during cold weather (daily high temperatures below 50°F) and at least twice weekly during mild and warm weather.
   - Contractor is responsible to provide and pay for all dumpsters.

B. The Contractor shall daily clean all mud, dirt and debris resulting from all trades operations from the adjacent streets, sidewalks, drives and parking areas and shall repair all damage caused by the cleaning to the satisfaction of the Owner.

C. The Contractor is to provide and maintain appropriate means of trash disposal (i.e., chutes) to grade/dumpster. Multiple units may be required and shall be figured for in the bid.

PART 2 - EXECUTION

2.01 ENCLOSURES

A. At earliest possible date, the Contractor shall secure project area against unauthorized entrance at times when personnel are not working. Provide secure temporary enclosure at ground floor and other locations of possible entry, with locked entrances.

B. Where any form of demolition will expose the interior of the building to weather, demolition shall follow the erection of weatherproof walls by the Contractor installed inside the demolition line, sealed and flashed, as required, to keep all water from the building interior. Keep temporary weatherproofing in place until new construction has been completed to the stage where water will not enter the building.

C. The Contractor shall provide constant protection against rain, wind, storms, frost or heat to maintain the work, materials, apparatus and fixtures free from damage. At the end of each day's work, cover work likely to be damaged. During cold weather, protect work from damage by freezing and provide such enclosures and heating apparatus as may be necessary diligently to prosecute the Work without stoppage for reason of unfavorable weather.

D. Wherever a Contractor provides openings through walls or slabs, each location shall be adequately protected at the end of each working day with temporary enclosures to make these areas tight. Openings through exterior walls shall be watertight.

E. Install an 8 foot high fence around the entire site with wind screening. Provide gates as needed to properly access the site to complete the work. Remove the fence once the project is substantially completed. Fence is

to have poles into the ground where the fence will be untouched per a period of time, and can have feet with sand bags in areas that the fence may have to be moved occasionally to not interfere with the work.

F. **For renovation projects: Contractor is to maintain the building in a water tight condition during all construction activities by whatever means necessary . Contractor is to never do any more removal work during any given day than that contractor can replace in the same day in order to make sure the occupants of the building will be protected from the possibility of water leakage into the building. Should any leak age occur, the contractor is to immediately make the building water tight (on a 24 hour basis) and repair any damage caused by the leakage or replace any equipment damaged by the leakage.**

2.02 TEMPORARY ELECTRICITY

A. Power is available on site.

2.03 TEMPORARY VENTILATION

A. A trade requiring ventilation for Work shall provide fans to induce circulation of air.

2.04 TEMPORARY TELEPHONES

A. Each Contractor is responsible for their own telephone service and for payment of all charges relating to that service.

2.05 TEMPORARY WATER

A. Water is available on site.

2.06 TEMPORARY SANITARY FACILITIES

A. Starting at time of start of work at project site, the Contractor shall provide and maintain self-contained toilet units of type acceptable to governing authorities, adequate, at all stages of construction, for use of personnel at project site. Provide separate facilities for male and female personnel when both sexes are working, in any capacity, at project site. Facilities shall remain in use until completion of project. Use of permanent facilities will not be permitted.

2.07 REMOVAL AND RESTORATION

A. Prior to acceptance of the Project, each contractor shall remove temporary work for which he has been responsible.

2.08 OWNER'S RIGHTS

A. If any Contractor fails to carry out his responsibilities in providing temporary facilities, as set forth above, the Owner shall have the right to take such action as he deems proper for the protection and conduct of the Work, and to deduct the cost thereof from the amount due the Contractor at fault.

B. Extended work days, hours, shifts, weekend work, etc. may be allowed upon coordination and approval by Architect, Owner at no additional cost to the Owner.

- Should the schedule begin to slip, for any reason, each contractor will be required to work additional shifts or weekends to recover the lost time. Should there be a cost to the College for this overtime work, the contractor will be required to reimburse the owner for said costs.

2.09 Parking: parking is allowed for two vehicles only. All other parking is to be at the TCNJ Carlton Avenue parking lot. The contractor is responsible to shuttle workers back and forth as needed.

END OF SECTION 01320

SECTION 01322 – PHOTOGRAPHIC DOCUMENTATION

PART 1 – GENERAL

1.01 RELATED DOCUMENTS

A. Drawings and general provisions of the Contract, including General and Supplementary Conditions and other Division 1 Specification Sections, apply to this Section.

1.02 SUMMARY

A. This Section includes administrative and procedural requirements for the following work by the General Contractor (other primes are encouraged to document the site and construction, but not required):

1. Preconstruction videotapes.

B. Related Sections include the following:

1. All of Division 1.

1.03 SUBMITTALS

A. Qualification Data: For photographer.

B. Videotapes: Submit 3 copies of each videotape with protective sleeve or case within seven days of recording. Remove safety tab to prevent accidental re-recording.

1. Identification: On each copy, provide an applied label with the following information:

   a. Name of Project.
   b. Name and address of photographer.
   c. Name of Architect
   d. Name of Contractor.
   e. Date videotape was recorded.
   f. Description of vantage point, indicating location, direction (by encompass point), and elevation or story of construction.

1.04 QUALITY ASSURANCE

A. Photographer Qualifications: An individual who has been regularly engaged as a professional photographer of construction products for not less than three years.

1.05 COORDINATION

A. Auxiliary Services: Cooperate with photographer and provide auxiliary services requested, including access to project site and use of temporary facilities, including temporary lighting required to produce clear, well-lit photographs without obscuring shadows.

1.06 USAGE RIGHTS

A. Obtain and transfer copyright usage rights from photographer to Owner for unlimited reproduction of photographic documentation.

PART 2 – PRODUCTS

2.01 PHOTOGRAPHIC MEDIA

A. Digital format as agreed to at the project kick off meeting.

PART 3 – EXECUTION

3.01 CONSTRUCTION VIDEOTAPES

A. Digital Photographer: Engage a qualified commercial videographer to record construction digital recordings.

B. Preconstruction: Before starting demolition or construction record, videotape (digital) of Project site, interior and exterior.

1. Show protection efforts by the Contractor.

END OF SECTION 01322

SECTION 01330 – CONTRACT CLOSEOUT

PART 1 – GENERAL

1.01 DEFINITION

A. Closeout is hereby defined to include general requirements near end of Contract Time, in preparation for final acceptance, final payment, normal termination of Contract, occupancy by Owner and similar actions evidencing completion of the work. Specific requirements for individual units of work are specified in sections of Divisions 2 through 16. Time of closeout is directly related to Substantial Completion, and therefore may be either a single time period for entire work or a series of time periods for individual parts of the work which have been certified as substantially complete at different dates. That time variation, if any, shall be applicable to other provisions of this section.

B. Substantial completion shall be defined that every material item has been installed. Nothing is missing and therefore, the punch list can begin.

1.02 PREREQUISITES TO SUBSTANTIAL COMPLETION

A. Prior to requesting the Architect's inspection for certification of substantial completion, for either entire work or portions thereof, complete the following and list known exceptions in request:

1. In progress payment request coincident with or first following date claimed, show either 100% completion for portion of work claimed as substantially complete, or list incomplete items, value of incomplete items, and reasons for being incomplete.
2. Include supporting documentation for completion as indicated in these Contract Documents.

    a. Prepare a list of items to be completed and corrected (punch list), the value of items on the list, and reasons why the Work is not complete.

3. Submit statement showing accounting of changes to the Contract Sum.
4. Advise Owner of pending insurance change over requirements.
5. Submit specific warranties, workmanship/maintenance bonds, maintenance agreements, final certifications and similar documents.
6. All fire sprinklers, devices, alarm system, roofing system, doors, insulation, etc. requiring FM Research approval to submit certification from Factory Mutual.
7. Obtain and submit releases enabling Owner's full and unrestricted use of the work and access to services and utilities, including occupancy permits, operating certificates, and similar releases.
8. Deliver tools, spare parts, extra stocks of materials, and similar physical items to Owner obtaining a signed receipt of materials delivered. Refer to individual work sections for required quantities of spare parts, extra and overrun stock, maintenance tools and devices, keys, and similar physical units to be submitted.
9. Complete start up testing of systems, and instructions of Owner's operating/maintenance personnel. Discontinue, or change over, and remove from project site temporary facilities and services, along with construction tools and facilities, mockups, and similar elements.
10. Complete final clean up requirements.
11. Touch up and otherwise repair and restore marred exposed finishes.
12. Inspection: Submit a written request for inspection for Substantial Completion to Project Manager. On receipt of request, Architect and Project Manager will either proceed with inspection or notify Contractor of unfulfilled requirements. Architect will prepare the Certificate of Substantial Completion after inspection, the Project Manager will notify Contractor of items, either on Contractor's list or additional items identified by Architect that must be completed or corrected before certificate will be issued.

1. Reinspection: Request reinspection when the Work identified in previous inspections as incomplete is completed or corrected.
2. Results of completed inspection will form the basis of requirements for Final Completion.

B. Upon receipt of Contractor's request, the Project Manager and Architect will proceed with substantial completion inspection. Following inspection, the Architect will either prepare the certificate of substantial completion, or advise the Contractor of work which shall be performed prior to issuance of certificate. The work remaining to be performed shall be completed prior to the punch list for final acceptance.

C. Upon receipt of Contractor's notice that work has been completed, including all punch list items, but excepting incomplete items delayed because of circumstances acceptable to the Project Manager and Architect, the Project Manager and Architect will reinspect the work. Upon completion of reinspection, the Architect will either prepare the certificate of final acceptance or advise the Contractor of work not completed or obligations not fulfilled as required for final acceptance.

D. In the event that the work is not completed or obligations are not fulfilled as required for final acceptance and the Architect/CM is required to reinspect the work more often than the two inspections described, the Contractor shall compensate the Architect and/or the Project Manager at the rate of $500.00 for each additional site visit required for reinspections. The compensation shall be processed by change order as a deduction to the Contractor's Contract Sum, which amount will be paid to the Architect or Project Manager by the Owner, through a change order as an addition to the Architect's or Project Manager's Contract Sum.

E. Substantial Completion shall be defined for this project that every element of the project/construction and the contract, based on the contract and amended drawings and specification sections, are installed and the building is deemed complete, less repairs and/or touch up type work that would be generally referred to as punchlist work. If any components of the building, or site work associated with this contract are not installed, the project cannot be deemed substantially completed.

1.03 PREREQUISITES TO FINAL ACCEPTANCE

A. Prior to requesting Project Manager and Architect's final inspection for certification of final acceptance and final payment, complete the following and list known exceptions, in request:

1. Submit final payment request with final releases and supporting documentation not previously submitted and accepted. Include certificates of insurance for products and completed operations where required.
2. Submit release of liens for all subcontractors.
3. Submit Contractor's statement that his final application, as presented, is the final bill and no other claims will be presented.
4. Submit updated final statement, accounting for additional changes to Contract Sum including change orders and allowances.
5. Submit certified copy of Architect's final punch list of itemized work to be completed or corrected, stating that each item has been completed or otherwise resolved for acceptance, endorsed and dated by Architect.
6. Submit one set of record documents, bound copies of maintenance/operating manuals, final project photographs, damage or settlement survey, property survey, and similar final record information.
7. Complete final clean up requirements.
8. Touch up and otherwise repair and restore marred exposed finishes.
9. Submit notarized consent of surety to final payment.
10. Submit final liquidated damages settlement statement, if required, acceptable to Project Manager and the Owner.
11. Revise and submit evidence of final, continuing insurance coverage complying with insurance requirements.

12. A letter from the Owner's representative certifying that he has been properly instructed in the operation and maintenance of equipment by the Contractor.
13. 10% one year Maintenance Bond.
14. Underwriter's Certificate or Electrical Sub Code Official's Approval.
15. Fire Alarm Certification and Description - NFPA form 72C including local County of Chester.
16. HVAC Contractor to submit certified balancing report.
17. Final acceptance by Architect of record documents

B. Except as otherwise indicated or requested by Project Manager/Architect, remove temporary protection devices and facilities that were installed during course of the work to protect previously completed work during remainder of construction period.

1.04 CLEAN UP

A. Remove waste materials from site and dispose of in a lawful manner.

PART 2 - PRODUCTS

NOT APPLICABLE

PART 3 - EXECUTION

3.01 CLEANING

A. Where extra materials of value remaining after completion of associated work have become Owner's property, dispose of these to Owner's best advantage as directed.

B. After Substantial Completion of the Work, each Contractor shall do the final cleaning of the surfaces of his installations as may be required by the various Specification sections.

C. After each Contractor has cleaned their work, The General Contractor shall engage a professional cleaning service to perform final cleaning of the work consisting of cleaning each surface or unit to normal clean condition. Comply with manufacturer's instructions for cleaning operations and chemicals. The following are examples, but not by way of limitation, of cleaning levels required:

1. Remove labels that are not required as permanent labels.
2. Clean transparent materials, including mirrors and window/door glass, to a polished condition, removing substances that are noticeable as vision obscuring materials. Replace broken glass and damaged transparent materials.
3. Clean exposed exterior and interior hard surfaced finishes, to a dirt free condition, free of dust, stains, films and similar noticeable distracting substances. Except as otherwise indicated, avoid disturbance of natural weathering of exterior surfaces. Restore reflective surfaces to original reflective conditions.
4. Wipe surfaces of mechanical and electrical equipment clean, including elevator equipment and similar equipment; remove excess lubrication and other substances.
5. Remove debris and surface dust from limited access spaces including roofs, plenums, shafts, trenches, equipment vaults, manholes, attics and similar spaces.
6. Vacuum and clean carpeted surfaces and similar soft surfaces.
7. Clean light fixtures and lamps to function with full efficiency.
8. Clean and wax or polish all hard floors following manufacturer’s instructions.
9. Clean all window surfaces inside and outside.
10. Perform final cleaning in, on and around all casework, sinks, toilets fixtures, etc.
11. Clean Project site, yard, and grounds, in areas disturbed by construction activities, including landscape development areas, of rubbish, waste material, litter, and other foreign substances.
12. Sweep paved areas broom clean. Remove petrochemical spills, stains, and other foreign deposits.

13. Rake grounds that are neither planted nor paved to a smooth, even-textured surface.
14. Remove tools, construction equipment, machinery, and surplus material from Project site.
15. Remove snow and ice to provide safe access to building.
16. Clean exposed exterior and interior hard-surfaced finishes to a dirt-free condition, free of stains, films, and similar foreign substances. Avoid disturbing natural weathering of exterior surfaces. Restore reflective surfaces to their original condition.
17. Sweep concrete floors broom clean.
18. Replace parts subject to unusual operating conditions.
19. Clean plumbing fixtures to a sanitary condition, free of stains, including stains resulting from water exposure.
20. Replace disposable air filters and clean permanent air filters. Clean exposed surfaces of diffusers, registers, and grills.
21. Clean ducts, blowers, and coils if units were operated without filters during construction.
22. Clean light fixtures, lamps, globes, and reflectors to function with full efficiency. Replace burned-out bulbs, and those noticeably dimmed by hours of use, and defective and noisy starters in fluorescent and mercury vapor fixtures to comply with requirements for new fixtures.
23. Leave Project clean and ready for occupancy.

D. Comply with safety standards for cleaning. Do not burn waste materials. Do not bury debris or excess materials on Owner's property. Do not discharge volatile, harmful, or dangerous materials into drainage systems. Remove waste materials from Project site and dispose of lawfully.

3.02 RECORD DOCUMENTS (Refer to Section 01340, project requirements for submitting Record Documents)

3.03 REMOVE TEMPORARY FACILITIES

A. At the completion of the work prior to final payment, remove all temporary facilities entirely from site, including, but not limited to, the following: Field offices, trailers, shanties, sheds, job telephone, temporary toilets, temporary enclosures, dust barriers and other temporary protection devices.

END OF SECTION 01330

SECTION 01340 - PROJECT RECORD DOCUMENTS

PART 1 - GENERAL

1.01 SUMMARY

A. Section Includes:

1. Project record documents consisting of:
   a. Record drawings.
   b. Record project manual (specifications).

1.02 SUBMITTALS

A. Project Record Documents: Submit after substantial completion, but prior to final completion.

1. Record drawings: Submit in form of opaque prints.
   a. Sets shall include all drawings, whether changed or not.
2. Other record documents: Submit originals or good quality photocopies.
3. Each Sub contractor is responsible for their respective trade, record documents and record drawings. Combine with General Contractor record drawing documents for a complete set.

PART 2 - PRODUCTS

(NOT USED)

PART 3 - EXECUTION

3.01 MAINTENANCE OF PROJECT RECORD DOCUMENTS

A. Do not use record documents of any type for construction purposes.

B. Maintain record documents in a secure location at the site while providing for access by the contractor and the architect during normal working hours; store in a fire-resistive room or container outside of normal working hours.

C. Record information as soon as possible after it is obtained.

D. Assign a person or persons responsible for maintaining record documents.

E. Record the following types of information on all applicable record documents:

1. Dimensional changes.
2. New and revised details.
3. Revisions to electrical circuits.
4. Locations of utilities concealed in construction.
5. Particulars on concealed products which will not be easy to identify later.
6. Changes made by modifications to the contract; note identification numbers if applicable.
7. New information which may be useful to the owner, but which was not shown in either the contract documents or submittals.

3.02 RECORD DRAWINGS

A. Maintain a complete set of opaque prints of the contract drawings, marked to show changes.
B. Where the actual work differs from that shown on the drawings, mark this set to show the actual work.

1. Mark location of concealed items before they are covered by other work.
2. Mark either record contract drawings or shop drawings, whichever are best suited to show the change.

C. When the contractor is required by a provision of a modification to prepare a new drawing, rather than to revise existing drawings, obtain instructions from the architect as to the drawing scale and information required.

D. Keep drawings in labeled, bound sets.

1. Mark with red pencil.
2. Mark work of separate contracts with different colors of pencils.
3. Incorporate new drawings into existing sets, as they are issued.

E. Where record drawings are also required as part of operation and maintenance data submittals, copy marks to another opaque print obtained from the architect.

3.03 RECORD PROJECT MANUAL

A. Maintain a complete copy of the project manual, marked to show changes.

B. Where the actual work differs from that shown in the project manual, mark the record copy to show the actual work.

1. Include a copy of each addendum and modification to the contract.
2. In addition to the types of information required on all record documents, record the following types of information:
   a. Product options taken, when the specification allows more than one.
   b. Proprietary name and model number of actual products furnished, for each product, material, and item of equipment specified.
   c. Name of the supplier and installer, for each product for which neither a product data submittal nor a maintenance data submittal was specified.

3.04 TRANSMITTAL TO OWNER (through the Architect)

A. Collect, organize, label, and package ready for reference.

1. Bind print sets with durable paper covers.
2. Label each document (and each sheet of drawings) with "PROJECT RECORD DOCUMENTS - This document has been prepared using information furnished by _____" [insert the contractor's name], and the date of preparation.

B. Submit to the Project Manager for transmittal to the Architect, unless otherwise indicated.

C. Submit to the Architect four (4) sets of Operation and Maintenance Manuals in three-ring binders, by volume, and indexed per binder (with one master index) to be transmitted to the Architect/Engineer for approval: All to be submitted at one time, not piece meal. Indexing should follow the specification section numbers.

- Include all inspection/approvals/certifications
- All approved submittals and cut sheets as well as manufacturer's operation and maintenance manuals for each section.
- Manuals are to be completed in volumes, three ring binders, starting with Division 1 and continuing through the last projects Division. The number of volumes is determined by the number of spec section the projects has and by the amount of paper/copies for complete sets of three ring binders.

- List of all contractors and vendors for the project with names, addresses and phone numbers.

END OF SECTION 01340

SECTION 01524 – CONSTRUCTION WASTE MANAGEMENT

PART 1 – GENERAL

1.1 RELATED DOCUMENTS

A. Drawings and general provisions of the Contract, including General and Supplementary Conditions and Division 1 Specification Sections, apply to this Section.

1.2 SUMMARY

A. This Section includes administrative and procedural requirements for the following:

1. Salvaging nonhazardous demolition and construction waste.
2. Recycling nonhazardous demolition and construction waste.
3. Disposing of nonhazardous demolition and construction waste.

B. Related Sections include the following:

1. All of Division 1 and attached specifications and drawings that make a part of this contract.

1.3 DEFINITIONS

A. Construction Waste: Building and site improvement materials and other solid waste resulting from construction, remodeling, renovation, or repair operations. Construction waste includes packaging.

B. Demolition Waste: Building and site improvement materials resulting from demolition or selective demolition operations.

C. Disposal: Removal off-site of demolition and construction waste and subsequent sale, recycling, reuse, or deposit in landfill or incinerator acceptable to authorities having jurisdiction.

D. Recycle: Recovery of demolition or construction waste for subsequent processing in preparation for reuse.

E. Salvage: Recovery of demolition or construction waste and subsequent sale or reuse in another facility.

1.4 SUBMITTALS

A. Waste Management Plan: Submit 4 copies of plan within 30 days of date established for the Notice to Proceed.

B. Records of Donations: Indicate receipt and acceptance of salvageable waste donated to individuals and organizations. Indicate whether organization is tax exempt.

C. Records of Sales: Indicate receipt and acceptance ofsalvageable waste sold to individuals and organizations. Indicate whether organization is tax exempt.

D. Recycling and Processing Facility Records: Indicate receipt and acceptance of recyclable waste by recycling and processing facilities licensed to accept them. Include manifests, weight tickets, receipts, and invoices.

E. Landfill and Incinerator Disposal Records: Indicate receipt and acceptance ofwaste by landfills and incinerator facilities licensed to accept them. Include manifests, weight tickets, receipts, and invoices.

1.5 QUALITY ASSURANCE

A. Regulatory Requirements: Comply with hauling and disposal regulations of authorities having jurisdiction.

B. Waste Management Conference: Conduct conference at Project site to comply with requirements in Division 1. Review methods and procedures related to waste management including, but not limited to, the following:

1. Review and discuss waste management plan.
2. Review requirements for documenting quantities of each type of waste and its disposition.
3. Review and finalize procedures for materials separation and verify availability of containers and bins needed to avoid delays.
4. Review procedures for periodic waste collection and transportation to recycling and disposal facilities.
5. Review waste management requirements for each trade.

1.6 WASTE MANAGEMENT PLAN

A. General: Develop plan consisting of waste identification, and waste reduction work plan. Indicate quantities by weight or volume, but use same units of measure throughout waste management plan.

B. Waste Identification: Indicate anticipated types and quantities of demolition, site-clearing, and construction waste generated by the Work. Include estimated quantities and assumptions for estimates.

C. Waste Reduction Work Plan: List each type of waste and whether it will be salvaged, recycled, or disposed of in landfill or incinerator. Include points of waste generation, total quantity of each type of waste, quantity for each means of recovery, and handling and transportation procedures.

1. Salvaged Materials for Sale: For materials that will be sold to individuals and organizations, include list of their names, addresses, and telephone numbers.
2. Salvaged Materials for Donation: For materials that will be donated to individuals and organizations, include list of their names, addresses, and telephone numbers.
3. Recycled Materials: Include list of local receivers and processors and type of recycled materials each will accept. Include names, addresses, and telephone numbers.
4. Disposed Materials: Indicate how and where materials will be disposed of. Include name, address, and telephone number of each landfill and incinerator facility.
5. Handling and Transportation Procedures: Include method that will be used for separating recyclable waste including sizes of containers, container labeling, and designated location on Project site where materials separation will be located.

PART 2 - PRODUCTS (Not Used)

PART 3 – EXECUTION

3.1 PLAN IMPLEMENTATION

A. General: Implement waste management plan as approved by Project Manager. Provide handling, containers, storage, signage, transportation, and other items as required to implement waste management plan during the entire duration of the Contract.

1. Comply with Division 1 Section "Temporary Facilities" for operation, termination, and removal requirements.

B. Training: Train workers, subcontractors, and suppliers on proper waste management procedures, as appropriate for the Work occurring at Project site.

1. Distribute waste management plan to entities when they first begin work on-site. Review plan

procedures and locations established for salvage, recycling, and disposal.

C. Site Access and Temporary Controls: Conduct wastemanagement operations to ensure minimum interference with roads, streets, walks, walkways, and other adjacent occupied and used facilities.

1. Designate and label specific areas on Project site necessary for separating materials that are to be salvaged, recycled, reused, donated, and sold.
2. Comply with Division 1 Section "Temporary Facilities and Controls" for controlling dust and dirt, environmental protection, and noise control.

3.2 SALVAGING DEMOLITION WASTE

A. Salvaged Items for Sale and Donation: Not permitted on Project site.

3.3 RECYCLING DEMOLITION AND CONSTRUCTION WASTE, GENERAL

A. General: Recycle beverage containers used by on-site workers.

B. Recycling Incentives: Revenues, savings, rebates, tax credits, and other incentives received for recycling waste materials shall accrue to the Contractor.

C. Procedures: Separate recyclable wastefrom other waste materials, trash, and debris. Separate recyclable waste by type at Project site to the maximum extent practical.

1. Provide appropriately marked containers or binsfor controlling recyclable waste until they are removed from Project site. Include list of acceptable and unacceptable materials at each container and bin.

a. Inspect containers and bins for contamination and remove contaminated materials if found.

2. Stockpile processed materials on-site without intermixing with other materials. Place, grade, and shape stockpiles to drain surface water. Cover to present windblown dust.
3. Stockpile materials away from construction area.
4. Store components off the ground and protect from the weather.
5. Remove recyclable waste off Owner's property and transport to recycling receiving or processor.

3.4 RECYCLING DEMOLITION WASTE

A. Asphaltic Concrete Paving: Break up and transport paving to asphalt-recycling facility.
B. Concrete: break up and sort rebar as best as possible. Recycle all concrete.
C. Recycle all metal products from the building before demolition (aluminum, steel etc)
D. Recycle as much product as possible and provide a complete report to TCNJ to confirm the percentage recycled on the project.

3.5 RECYCLING CONSTRUCTION WASTE

A. Packaging:

1. Cardboard and Boxes: Break down packaging into flat sheets. Bundle and store in a dry location.
2. Polystyrene Packaging: Separate and bag materials.
3. Pallets: As much as possible, require deliveries using pallets to remove pallets from Project site. For pallets that remain on-site, break down pallets into component wood pieces and comply with requirements for recycling wood.
4. Crates: Break down crates into component wood pieces and comply with requirements for recycling wood.

B. Wood Materials:

1. Clean Cut-Offs of Lumber: Grind or chip into small pieces.

3.6 DISPOSAL OF WASTE

A. General: Except for items or materials to be salvaged, recycled, or otherwise reused, remove waste materials from Project site and legally dispose of them in a landfill or incinerator acceptable to authorities having jurisdiction.

1. Except as otherwise specified, do not allow waste materials that are to be disposed of accumulate on-site.
2. Remove and transport debris in a manner that will prevent spillage on adjacent surfaces and areas.

B. Burning: Do not burn waste materials on site.

C. Burying: Do not bury waste materials on site.

D. Disposal: Transport waste materials off Owner's property and legally dispose of them.

E. Washing waste materials into sewers or drains is not permitted.

END OF SECTION 01524

SECTION 024119 -SELECTIVE DEMOLITION

PART 1 -GENERAL

1.1 RELATED DOCUMENTS

A. Drawings and general provisions of the Contract, including General and Supplementary Conditions, apply to this Section.

1.2 SUMMARY

A. Section Includes:

1. Demolition and removal of selected site elements.

B. Related Requirements:

1. General Conditions for restrictions on the use of the premises, temporary facilities, disposal of materials and Owner-occupancy requirements.
2. Section 311000 "Site Clearing" for site clearing and removal of above-and below-grade improvements.

1.3 DEFINITIONS

A. Remove: Detach items from existing construction and legally dispose of them off-site unless indicated to be removed and salvaged or removed and reinstalled.

B. Existing to Remain: Existing items of construction that are not to be permanently removed and that are not otherwise indicated to be removed, removed and salvaged, or removed and reinstalled.

1.4 MATERIALS OWNERSHIP

A. Unless otherwise indicated, demolition waste becomes property of Contractor.

1.5 PRE-INSTALLATION MEETINGS

A. Pre-demolition Conference: Conduct conference at Project site.

1. Inspect and discuss condition of construction to be selectively demolished.
2. Review and finalize selective demolition schedule and verify availability of materials, demolition personnel, equipment, and facilities needed to make progress and avoid delays.
3. Review requirements of work performed by other trades that rely on substrates exposed by selective demolition operations.
4. Review areas where existing construction is to remain and requires protection.

1.6 INFORMATIONAL SUBMITTALS

A. Qualification Data: For refrigerant recovery technician.

B. Proposed Protection Measures: Submit report, including drawings, that indicates the measures proposed for protecting individuals and property. Indicate proposed locations and construction of barriers.

C. Schedule of Selective Demolition Activities: Indicate the following:

1. Detailed sequence of selective demolition and removal work, with starting and ending dates for each activity. Ensure Owner's on-site operations are uninterrupted.

2. Interruption of utility services. Indicate how long utility services will be interrupted.

3. Coordination for shutoff, capping, and continuation of utility services.

4. Coordination of Owner's continuing occupancy of portions of the site and of Owner's partial occupancy of completed Work.

D. Inventory: Submit a list of items to be removed and salvaged and deliver to Owner prior to start of demolition.

E. Pre-demolition Photographs or Video: Submit before Work begins.

F. Warranties: Documentation indicated that existing warranties are still in effect after completion of selective demolition.

1.7 CLOSEOUT SUBMITTALS

A. Inventory: Submit a list of items that have been removed.

B. Landfill Records: Indicate receipt and acceptance of hazardous wastes by a landfill facility licensed to accept hazardous wastes.

1.8 FIELD CONDITIONS

A. Owner will occupy portions of the site immediately adjacent to selective demolition areas. Conduct selective demolition so Owner's operations will not be disrupted.

B. Conditions existing at time of inspection for bidding purpose will be maintained by Owner as far as practical.

C. Notify Engineer of discrepancies between existing conditions and Drawings before proceeding with selective demolition.

D. Hazardous Materials: Hazardous materials are expected in the piping and specialties to be selectively demolished.

1. Owner shall remove hazardous materials before and during demolition. Coordinate with owner is existing materials are suspect during excavation.

E. Storage or sale of removed items or materials on-site is not permitted.

F. Utility Service: Maintain existing utilities indicated to remain in service and protect them against damage during selective demolition operations.

1.9 WARRANTY

A. Existing Warranties: Remove, replace, patch, and repair materials and surfaces cut or damaged during selective demolition, by methods and with materials so as not to void existing warranties. Notify warrantor before proceeding. Existing warranties include the following:

B. Notify warrantor on completion of selective demolition, and obtain documentation verifying that existing system has been inspected and warranty remains in effect. Submit documentation at Project closeout.

PART 2 -PRODUCTS

2.1 PERFORMANCE REQUIREMENTS

A. Regulatory Requirements: Comply with governing EPA notification regulations before beginning selective demolition. Comply with hauling and disposal regulations of authorities having jurisdiction.

B. Standards: Comply with ANSI/ASSE A10.6 and NFPA 241.

PART 3 -EXECUTION

3.1 EXAMINATION

A. Verify that utilities have been disconnected and capped before starting selective demolition operations.

B. Review record documents of existing construction provided by Owner. Owner does not guarantee that existing conditions are same as those indicated in record documents.

C. Survey existing conditions and correlate with requirements indicated to determine extent of selective demolition required.

D. When unanticipated mechanical, electrical, or structural elements that conflict with intended function or design are encountered, investigate and measure the nature and extent of conflict. Promptly submit a written report to Architect.

3.2 UTILITY SERVICES AND MECHANICAL/ELECTRICAL SYSTEMS

A. Existing Services/Systems to Remain: Maintain services/systems indicated to remain and protect them against damage.

B. Existing Services/Systems to Be Removed, Relocated, or Abandoned: Locate, identify, disconnect, and seal or cap off indicated utility services and mechanical systems serving areas to be selectively demolished.

1. Owner will arrange to shut off indicated services/systems when requested by Contractor.
2. If services/systems are required to be removed, relocated, or abandoned, provide temporary services/systems that bypass area of selective demolition and that maintain continuity of services/systems to other parts of building.
3. Disconnect, demolish, and remove steam piping and components indicated to be removed.
    a. Piping to Be Removed: Remove portion of piping indicated to be removed and cap or plug remaining piping with same or compatible piping material.
    b. Piping to Be Abandoned in Place: Drain piping and cap or plug piping with same or compatible piping material.

3.3 PREPARATION

A. Site Access and Temporary Controls: Conduct selective demolition and debris-removal operations to ensure minimum interference with roads, streets, walks, walkways, and other adjacent occupied and used facilities.

B. Temporary Facilities: Provide temporary barricades, walkway, bridges and other protection required to prevent injury to people and damage to adjacent buildings and facilities to remain.

1. Provide protection to ensure safe passage of people around selective demolition area and to and from occupied portions of site.

C. Temporary Weather Protection: Provide temporary weather protection at all times in areas of selective demolition.

D. Temporary Shoring: Provide and maintain shoring, bracing, and structural supports as required to preserve stability and prevent movement, settlement, or collapse of surrounding areas, and to prevent unexpected or uncontrolled movement or collapse of construction being demolished.

1. Strengthen or add new supports when required during progress of selective demolition.

3.4 SELECTIVE DEMOLITION, GENERAL

A. General: Demolish and remove existing construction only to the extent required by new construction and as indicated. Use methods required to complete the Work within limitations of governing regulations and as follows:

1. Neatly cut openings in manholes plumb, square, and true to dimensions required. Use cutting methods least likely to damage overall structure of manholes.

2. Do not use cutting torches until work area is cleared of flammable materials. At concealed spaces, such as manhole interiors, verify condition and contents of confined space before starting flame-cutting operations. Maintain portable fire-suppression devices during flame-cutting operations.

3. Maintain adequate ventilation when using cutting torches.

4. Remove decayed, vermin-infested, or otherwise dangerous or unsuitable materials and promptly dispose of off-site.

5. Locate selective demolition equipment and remove debris and materials so as not to impede normal traffic of college students and personnel.

6. Dispose of demolished items and materials promptly.

3.5 DISPOSAL OF DEMOLISHED MATERIALS

A. General: Remove demolished materials from Project site and legally dispose of them.

1. Do not allow demolished materials to accumulate on-site.

2. Remove and transport debris in a manner that will prevent spillage on adjacent surfaces and areas.

3.6 CLEANING

A. Clean adjacent structures and improvements of dust, dirt, and debris caused by selective demolition operations. Return adjacent areas to condition existing before selective demolition operations began.

END OF SECTION 024119

SECTION 033100 - CAST-IN-PLACE CONCRETE

PART 1 - GENERAL

1.1 RELATED DOCUMENTS

A. Drawings and general provisions of the Contract, including General and Supplementary Conditions and Division 1 Specification Sections, apply to this Section.

B. Cast-in-Place Concrete shall be performed in accordance with Section 504 of the New Jersey Department of Transportation Standard Specifications for Road and Bridge Construction, latest edition.

C. Concrete curb shall be in accordance with Section 607 of the New Jersey Department of Transportation Standard Specifications for Road and Bridge Construction, latest edition.

1.2 SUMMARY

A. This Section specifies concrete, including formwork, reinforcement, concrete materials, mixture design, placement procedures, and finishes, for the following:
1. Concrete footings for signage and fencing.
2. Concrete base for pavers.
3. Concrete curb.
4. Cast-in-Place Concrete light pole bases.
5. Pre-cast Concrete light pole bases.
6. Miscellaneous concrete site work.

B. Related Sections include the following:
1. Section 321416 – “Brick Pavers”

1.3 SUBMITTALS

A. Product Data: For each type of product indicated.

B. Design Mixtures: For each concrete mixture. Submit alternate design mixtures when characteristics of materials, Project conditions, weather, test results, or other circumstances warrant adjustments.

C. Steel Reinforcement Shop Drawings: Placing drawings that detail fabrication, bending, and placement. Include bar sizes, lengths, material, grade, bar schedules, stirrup spacing, bent bar diagrams, bar arrangement, splices and laps, mechanical connections, tie spacing, hoop spacing, and supports for concrete reinforcement.

D. Formwork Shop Drawings: Prepared by or under the supervision of a qualified professional engineer detailing fabrication, assembly, and support of formwork.

1. Shoring and Reshoring: Indicate proposed schedule and sequence of stripping formwork, shoring removal, and installing and removing reshoring.

E. Qualification Data: For Installer.

F. Material Test Reports: For the following, from a qualified testing agency, indicating compliance with requirements:

1. Aggregates.

G. Material Certificates: For each of the following, signed by manufacturers:

1. Cementitious materials.
2. Admixtures.
3. Form materials and form-release agents.
4. Steel reinforcement and accessories.

1.4 QUALITY ASSURANCE

A. Installer Qualifications: A qualified installer who employs on Project personnel qualified as ACI-certified Flatwork Technician and Finisher and a supervisor who is an ACI-certified Concrete Flatwork Technician.

B. Manufacturer Qualifications: A firm experienced in manufacturing ready-mixed concrete products and that complies with ASTM C 94/C 94M requirements for production facilities and equipment.

1. Manufacturer certified according to NRMCA's "Certification of Ready Mixed Concrete Production Facilities."

C. Testing Agency Qualifications: An independent agency, acceptable to authorities having jurisdiction, qualified according to ASTM C 1077 and ASTM E 329 for testing indicated, as documented according to ASTM E 548.

1. Personnel conducting field tests shall be qualified as ACI Concrete Field Testing Technician, Grade 1, according to ACI CP-01 or an equivalent certification program.

D. Source Limitations: Obtain each type or class of cementitious material of the same brand from the same manufacturer's plant, obtain aggregate from one source, and obtain admixtures through one source from a single manufacturer.

E. Welding: Qualify procedures and personnel according to AWS D1.4, "Structural Welding Code--Reinforcing Steel."

F. ACI Publications: Comply with the following unless modified by requirements in the Contract Documents:

1. ACI 301, "Specification for Structural Concrete,"
2. ACI 117, "Specifications for Tolerances for Concrete Construction and Materials."

G. Concrete Testing Service: Engage a qualified independent testing agency to perform material evaluation tests and to design concrete mixtures.

1.5 DELIVERY, STORAGE, AND HANDLING

A. Steel Reinforcement: Deliver, store, and handle steel reinforcement to prevent bending and damage.

PART 2 - PRODUCTS

2.1 FORM-FACING MATERIALS

A. Smooth-Formed Finished Concrete: Form-facing panels that will provide continuous, true, and smooth concrete surfaces. Furnish in largest practicable sizes to minimize number of joints.

1. Plywood, metal, or other approved panel materials.

B. Rough-Formed Finished Concrete: Plywood, lumber, metal, or another approved material. Provide lumber dressed on at least two edges and one side for tight fit.

C. Chamfer Strips: Wood, metal, PVC, or rubber strips, 3/4 by 3/4 inch, minimum.

D. Form-Release Agent: Commercially formulated form-release agent that will not bond with, stain, or adversely affect concrete surfaces and will not impair subsequent treatments of concrete surfaces.

1. Formulate form-release agent with rust inhibitor for steel form-facing materials.

E. Form Ties: Factory-fabricated, removable or snap-off metal or glass-fiber-reinforced plastic form ties designed to resist lateral pressure of fresh concrete on forms and to prevent spalling of concrete on removal.

2.2 STEEL REINFORCEMENT

A. Reinforcing Bars: ASTM A 615/A 615M, Grade 60, deformed.

B. Plain-Steel Welded Wire Reinforcement: ASTM A 185, plain, fabricated from as-drawn steel wire into flat sheets.

C. Deformed-Steel Welded Wire Reinforcement: ASTM A 497, flat sheet.

2.3 REINFORCEMENT ACCESSORIES

A. Bar Supports: Bolsters, chairs, spacers, and other devices for spacing, supporting, and fastening reinforcing bars and welded wire reinforcement in place. Manufacture bar supports from steel wire, plastic, or precast concrete according to CRSI's "Manual of Standard Practice," of greater compressive strength than concrete and as follows:

2.4 CONCRETE MATERIALS

A. Cementitious Material: Use the following cementitious materials, of the same type, brand, and source, throughout Project:

1. Portland Cement: ASTM C 150, Type I/II,.

B. Normal-Weight Aggregates: ASTM C 33, Class 3S coarse aggregate or better, graded. Provide aggregates from a single source.

1. Maximum Coarse-Aggregate Size: 3/4 inch nominal.

C. Water: ASTM C 94/C 94M and potable.

D. Concrete for Curb Construction shall be AE Class B Portland Cement having a 28-day strength for 4,000 psi.

2.5 ADMIXTURES

A. Air-Entraining Admixture: ASTM C 260.

B. Chemical Admixtures: Provide admixtures certified by manufacturer to be compatible with other admixtures and that will not contribute water-soluble chloride ions exceeding those permitted in hardened concrete. Do not use calcium chloride or admixtures containing calcium chloride.

1. Water-Reducing Admixture: ASTM C 494/C 494M, Type A.
2. Water-Reducing and Retarding Admixture: ASTM C 494/C 494M, Type D.
3. High-Range, Water-Reducing Admixture: ASTM C 494/C 494M, Type F.

2.6 CURING MATERIALS

A. Evaporation Retarder: Waterborne, monomolecular film forming, manufactured for application to fresh concrete.

B. Absorptive Cover: AASHTO M 182, Class 2, burlap cloth made from jute or kenaf, weighing approximately 9 oz./sq. yd. when dry.

C. Moisture-Retaining Cover: ASTM C 171, polyethylene film or white burlap-polyethylene sheet.

D. Water: Potable.

E. Clear, Waterborne, Membrane-Forming Curing Compound: ASTM C 309, Type 1, Class B, dissipating.

F. Clear, Solvent-Borne, Membrane-Forming Curing and Sealing Compound: ASTM C 1315, Type 1, Class A.

2.7 RELATED MATERIALS

A. Expansion- and Isolation-Joint-Filler Strips: ASTM D 1751, asphalt-saturated cellulosic fiber.

B. ½" thick preformed bituminous joint filler shall be used to construct expansion joints in concrete curb at 20' O.C.

C. Bonding Agent: ASTM C 1059, Type II, non-redispersible, acrylic emulsion or styrene butadiene.

2.8 CONCRETE MIXTURES, GENERAL

A. Prepare design mixtures for each type and strength of concrete, proportioned on the basis of laboratory trial mixture or field test data, or both, according to ACI 301.

1. Use a qualified independent testing agency for preparing and reporting proposed mixture designs based on laboratory trial mixtures.

B. Admixtures: Use admixtures according to manufacturer's written instructions.

1. Use water-reducing or high-range water-reducing admixture in concrete, as required, for placement and workability.
2. Use water-reducing and retarding admixture when required by high temperatures, low humidity, or other adverse placement conditions.
3. Use water-reducing admixture in pumped concrete, concrete for heavy-use industrial slabs and parking structure slabs, concrete required to be watertight, and concrete with a water-cementitious materials ratio below 0.50.

2.9 FABRICATING REINFORCEMENT

A. Fabricate steel reinforcement according to CRSI's "Manual of Standard Practice."

2.10 CONCRETE MIXING

A. Ready-Mixed Concrete: Measure, batch, mix, and deliver concrete according to ASTM C 94/C 94M, and furnish batch ticket information.

1. When air temperature is between 85 and 90 deg F, reduce mixing and delivery time from 1-1/2 hours to 75 minutes; when air temperature is above 90 deg F, reduce mixing and delivery time to 60 minutes.

PART 3 - EXECUTION

3.1 FORMWORK

A. Design, erect, shore, brace, and maintain formwork, according to ACI 301, to support vertical, lateral, static, and dynamic loads, and construction loads that might be applied, until structure can support such loads.

B. Construct formwork so concrete members and structures are of size, shape, alignment, elevation, and position indicated, within tolerance limits of ACI 117.

C. Limit concrete surface irregularities, designated by ACI 347R as abrupt or gradual, as follows:

1. Class A, 1/8 inch for smooth-formed finished surfaces.
2. Class B, 1/4 inch Class C, 1/2 inch for rough-formed finished surfaces.

D. Construct forms tight enough to prevent loss of concrete mortar.

E. Fabricate forms for easy removal without hammering or prying against concrete surfaces. Provide crush or wrecking plates where stripping may damage cast concrete surfaces. Provide top forms for inclined surfaces steeper than 1.5 horizontal to 1 vertical.

1. Install keyways, reglets, recesses, and the like, for easy removal.
2. Do not use rust-stained steel form-facing material.

F. Chamfer exterior corners and edges of permanently exposed concrete.

G. Form openings, chases, offsets, sinkages, keyways, reglets, blocking, screeds, and bulkheads required in the Work. Determine sizes and locations from trades providing such items.

H. Clean forms and adjacent surfaces to receive concrete. Remove chips, wood, sawdust, dirt, and other debris just before placing concrete.

I. Retighten forms and bracing before placing concrete, as required, to prevent mortar leaks and maintain proper alignment.

J. Coat contact surfaces of forms with form-release agent, according to manufacturer's written instructions, before placing reinforcement.

3.2 EMBEDDED ITEMS

A. Place and secure anchorage devices and other embedded items required for adjoining work that is attached to or supported by cast-in-place concrete. Use setting drawings, templates, diagrams, instructions, and directions furnished with items to be embedded.

3.3 REMOVING AND REUSING FORMS

A. General: Formwork for sides of beams, walls, columns, and similar parts of the Work that does not support weight of concrete may be removed after cumulatively curing at not less than 50 deg F for 24 hours after placing concrete, if concrete is hard enough to not be damaged by form-removal operations and curing and protection operations are maintained.

B. Clean and repair surfaces of forms to be reused in the Work. Split, frayed, delaminated, or otherwise damaged form-facing material will not be acceptable for exposed surfaces. Apply new form-release agent.

C. When forms are reused, clean surfaces, remove fins and laitance, and tighten to close joints. Align and secure joints to avoid offsets.

3.4 STEEL REINFORCEMENT

A. General: Comply with CRSI's "Manual of Standard Practice" for placing reinforcement.

1. Do not cut or puncture vapor retarder. Repair damage and reseal vapor retarder before placing concrete.

B. Clean reinforcement of loose rust and mill scale, earth, ice, and other foreign materials that would reduce bond to concrete.

C. Accurately position, support, and secure reinforcement against displacement. Locate and support reinforcement with bar supports to maintain minimum concrete cover. Do not tack weld crossing reinforcing bars.

D. Set wire ties with ends directed into concrete, not toward exposed concrete surfaces.

E. Install welded wire reinforcement in longest practicable lengths on bar supports spaced to minimize sagging. Lap edges and ends of adjoining sheets at least one mesh spacing. Offset

laps of adjoining sheet widths to prevent continuous laps in either direction. Lace overlaps with wire.

3.5 JOINTS

A. General: Construct joints true to line with faces perpendicular to surface plane of concrete.

B. Construction Joints: Install so strength and appearance of concrete are not impaired, at locations indicated or as approved by Engineer.

1. Place joints perpendicular to main reinforcement. Continue reinforcement across construction joints, unless otherwise indicated. Do not continue reinforcement through sides of strip placements of floors and slabs.
2. Form keyed joints as indicated. Embed keys at least 1-1/2 inches into concrete.
3. Locate joints for beams, slabs, joists, and girders in the middle third of spans. Offset joints in girders a minimum distance of twice the beam width from a beam-girder intersection.
4. Locate horizontal joints in walls and columns at underside of floors, slabs, beams, and girders and at the top of footings or floor slabs.
5. Space vertical joints in walls as indicated. Locate joints beside piers integral with walls, near corners, and in concealed locations where possible.
6. Construction joints for concrete curb shall be constructed at 20’ O.C. and offset to 10’ O.C. from expansion joints.
7. Use epoxy-bonding adhesive at locations where fresh concrete is placed against hardened or partially hardened concrete surfaces.

C. Contraction Joints in Slabs-on-Grade: Form weakened-plane contraction joints, sectioning concrete into areas as indicated. Construct contraction joints for a depth equal to at least one-fourth of concrete thickness as follows:

1. Grooved Joints: Form contraction joints after initial floating by grooving and finishing each edge of joint to a radius of 1/8 inch. Repeat grooving of contraction joints after applying surface finishes. Eliminate groover tool marks on concrete surfaces.
2. Sawed Joints: Form contraction joints with power saws equipped with shatterproof abrasive or diamond-rimmed blades. Cut 1/8-inch- wide joints into concrete when cutting action will not tear, abrade, or otherwise damage surface and before concrete develops random contraction cracks.

D. Doweled Joints: Install dowel bars and support assemblies at joints where indicated. Lubricate or asphalt coat one-half of dowel length to prevent concrete bonding to one side of joint.

3.6 CONCRETE PLACEMENT

A. Before placing concrete, verify that installation of formwork, reinforcement, and embedded items is complete and that required inspections have been performed.

B. Do not add water to concrete during delivery, at Project site, or during placement unless approved by Owner or Landscape Architect.

C. Deposit concrete continuously in one layer or in horizontal layers of such thickness that no new concrete will be placed on concrete that has hardened enough to cause seams or planes of weakness. If a section cannot be placed continuously, provide construction joints as indicated. Deposit concrete to avoid segregation.

D. Deposit and consolidate concrete for slabs in a continuous operation, within limits of construction joints, until placement of a panel or section is complete.

1. Consolidate concrete during placement operations so concrete is thoroughly worked around reinforcement and other embedded items and into corners.
2. Maintain reinforcement in position on chairs during concrete placement.
3. Screed slab surfaces with a straightedge and strike off to correct elevations.
4. Slope surfaces uniformly to drains where required.
5. Begin initial floating using bull floats or darbies to form a uniform and open-textured surface plane, before excess bleedwater appears on the surface. Do not further disturb slab surfaces before starting finishing operations.

E. Cold-Weather Placement: Comply with ACI 306.1 and as follows. Protect concrete work from physical damage or reduced strength that could be caused by frost, freezing actions, or low temperatures.

1. When average high and low temperature is expected to fall below 40 deg F for three successive days, maintain delivered concrete mixture temperature within the temperature range required by ACI 301.
2. Do not use frozen materials or materials containing ice or snow. Do not place concrete on frozen subgrade or on subgrade containing frozen materials.
3. Do not use calcium chloride, salt, or other materials containing antifreeze agents or chemical accelerators unless otherwise specified and approved in mixture designs.

F. Hot-Weather Placement: Comply with ACI 301 and as follows:

1. Maintain concrete temperature below 90 deg F at time of placement. Chilled mixing water or chopped ice may be used to control temperature, provided water equivalent of ice is calculated to total amount of mixing water. Using liquid nitrogen to cool concrete is Contractor's option.
2. Fog-spray forms, steel reinforcement, and subgrade just before placing concrete. Keep subgrade uniformly moist without standing water, soft spots, or dry areas.

3.7 FINISHING FORMED SURFACES

A. Rough-Formed Finish: As-cast concrete texture imparted by form-facing material with tie holes and defects repaired and patched. Remove fins and other projections that exceed specified limits on formed-surface irregularities.

1. Apply to concrete surfaces not exposed to public view.

B. Smooth-Formed Finish: As-cast concrete texture imparted by form-facing material, arranged in an orderly and symmetrical manner with a minimum of seams. Repair and patch tie holes and defects. Remove fins and other projections that exceed specified limits on formed-surface irregularities.

1. Apply to concrete surfaces exposed to public view.

C. Related Unformed Surfaces: At tops of walls, horizontal offsets, and similar unformed surfaces adjacent to formed surfaces, strike off smooth and finish with a texture matching adjacent formed surfaces. Continue final surface treatment of formed surfaces uniformly across adjacent unformed surfaces, unless otherwise indicated.

3.8 CONCRETE PROTECTING AND CURING

A. General: Protect freshly placed concrete from premature drying and excessive cold or hot temperatures. Comply with ACI 306.1 for cold-weather protection and ACI 301 for hot-weather protection during curing.

B. Evaporation Retarder: Apply evaporation retarder to unformed concrete surfaces if hot, dry, or windy conditions cause moisture loss approaching 0.2 lb/sq. ft. x h before and during finishing operations. Apply according to manufacturer's written instructions after placing, screeding, and bull floating or darbying concrete, but before float finishing.

C. Formed Surfaces: Cure formed concrete surfaces, including underside of beams, supported slabs, and other similar surfaces. If forms remain during curing period, moist cure after loosening forms. If removing forms before end of curing period, continue curing for the remainder of the curing period.

D. Unformed Surfaces: Begin curing immediately after finishing concrete. Cure unformed surfaces, including floors and slabs, concrete floor toppings, and other surfaces.

E. Cure concrete according to ACI 308.1, by one or a combination of the following methods:

1. Moisture Curing: Keep surfaces continuously moist for not less than seven days with the following materials:

    a. Water.
    b. Continuous water-fog spray.
    c. Absorptive cover, water saturated, and kept continuously wet. Cover concrete surfaces and edges with 12-inch lap over adjacent absorptive covers.

2. Moisture-Retaining-Cover Curing: Cover concrete surfaces with moisture-retaining cover for curing concrete, placed in widest practicable width, with sides and ends lapped at least 12 inches, and sealed by waterproof tape or adhesive. Cure for not less than seven days. Immediately repair any holes or tears during curing period using cover material and waterproof tape.

3. Curing Compound: Apply uniformly in continuous operation by power spray or roller according to manufacturer's written instructions. Recoat areas subjected to heavy rainfall within three hours after initial application. Maintain continuity of coating and repair damage during curing period.

4. Curing and Sealing Compound: Apply uniformly to floors and slabs indicated in a continuous operation by power spray or roller according to manufacturer's written instructions. Recoat areas subjected to heavy rainfall within three hours after initial application. Repeat process 24 hours later and apply a second coat. Maintain continuity of coating and repair damage during curing period.

3.9 FIELD QUALITY CONTROL

A. Testing and Inspecting: Engage a qualified testing and inspecting agency to perform tests and inspections and to submit reports.

B. Inspections:

1. Steel reinforcement placement.

2. Verification of use of required design mixture.
3. Concrete placement, including conveying and depositing.
4. Curing procedures and maintenance of curing temperature.
5. Verification of concrete strength before removal of shores and forms from beams and slabs.

C. Concrete Tests: Testing of composite samples of fresh concrete obtained according to ASTM C 172 shall be performed according to the following requirements:

1. Testing Frequency: Obtain one composite sample for each day's pour of each concrete mixture exceeding 5 cu. yd., but less than 25 cu. yd., plus one set for each additional 50 cu. yd. or fraction thereof.

2. Slump: ASTM C 143/C 143M; one test at point of placement for each composite sample, but not less than one test for each day's pour of each concrete mixture. Perform additional tests when concrete consistency appears to change.
3. Air Content: ASTM C 231, pressure method, for normal-weight concrete; one test for each composite sample, but not less than one test for each day's pour of each concrete mixture.
4. Concrete Temperature: ASTM C 1064/C 1064M; one test hourly when air temperature is 40 deg F and below and when 80 deg F and above, and one test for each composite sample.
5. Compression Test Specimens: ASTM C 31/C 31M.

    a. Cast and laboratory cure two sets of two standard cylinder specimens for each composite sample.
    b. Cast and field cure two sets of two standard cylinder specimens for each composite sample.

6. Compressive-Strength Tests: ASTM C 39/C 39M; test one set of two laboratory-cured specimens at 7 days and one set of two specimens at 28 days.

    a. Test one set of two field-cured specimens at 7 days and one set of two specimens at 28 days.
    b. A compressive-strength test shall be the average compressive strength from a set of two specimens obtained from same composite sample and tested at age indicated.

7. When strength of field-cured cylinders is less than 85 percent of companion laboratory-cured cylinders, Contractor shall evaluate operations and provide corrective procedures for protecting and curing in-place concrete.
8. Strength of each concrete mixture will be satisfactory if every average of any three consecutive compressive-strength tests equals or exceeds specified compressive strength and no compressive-strength test value falls below specified compressive strength by more than 500 psi.
9. Test results shall be reported in writing to Engineer, concrete manufacturer, and Contractor within 48 hours of testing. Reports of compressive-strength tests shall contain Project identification name and number, date of concrete placement, name of concrete testing and inspecting agency, location of concrete batch in Work, design compressive strength at 28 days, concrete mixture proportions and materials, compressive breaking strength, and type of break for both 7- and 28-day tests.

END OF SECTION 033100

SECTION 033200 - CONCRETE PAVING

PART 1 -GENERAL

1.1 RELATED DOCUMENTS

A. Drawings and general provisions of the Contract, including General and Supplementary Conditions and Division 01 Specification Sections, apply to this Section.
B. Section 033100 Cast-in-Place Concrete

1.2 SUMMARY

A. Section Includes:
    1. Walks
    2. Plaza Nodes

1.3 DEFINITIONS

A. Cementitious Materials: Portland cement alone or in combination with one or more of blended hydraulic cement, fly ash and other pozzolans, and ground granulated blast-furnace slag.
B. WWM: Woven Wire Mesh

1.4 ACTION SUBMITTALS

A. Product Data: For each type of product indicated.
B. Other Action Submittals:
    1. Design Mixtures: For each concrete mixture. Include alternate design mixtures when characteristics of materials, Project conditions, weather, test results, or other circumstances warrant adjustments.

1.5 INFORMATIONAL SUBMITTALS

A. Qualification Data: For qualified ready-mix concrete manufacturer.
B. Material Certificates: For the following, from manufacturer:
    1 Cementitious materials.
    2 Steel reinforcement and reinforcement accessories.
    3 Fiber reinforcement.
    4 Admixtures.
    5 Curing compounds.
    6 Applied finish materials.
    7 Bonding agent or epoxy adhesive.
    8 Joint fillers.
C. Material Test Reports: For each of the following:
    1 Aggregates.
D. Field quality-control reports.

1.6 QUALITY ASSURANCE

A. Ready-Mix-Concrete Manufacturer Qualifications: A firm experienced in manufacturing ready-mixed concrete products and that complies with ASTM C 94/C 94M requirements for production facilities and equipment.

1 Manufacturer certified according to NRMCA's "Certification of Ready Mixed Concrete Production Facilities" (Quality Control Manual ¬Section 3, "Plant Certification Checklist").

B. Testing Agency Qualifications: Qualified according to ASTM C 1077 and ASTM E 329 for testing indicated.
   1. Personnel conducting field tests shall be qualified as ACI Concrete Field Testing Technician, Grade 1, according to ACI CP-1 or an equivalent certification program.

C. Concrete Testing Service: Engage a qualified testing agency to perform material evaluation tests and to design concrete mixtures.

D. ACI Publications: Comply with ACI 301 (ACI 301M) unless otherwise indicated.

1.7 PROJECT CONDITIONS

A. Traffic Control:
   1 Maintain access for pedestrian traffic as required for other construction activities. Bridges shall be provided over existing walkways during construction.
   2 Installation of temporary walkways (Gravel) will be required to maintain traffic flow as best as possible during the work of each area. Keep work areas neat and organized at all times.
   3 All areas to be secure with proper fencing and signage to prevent physical harm to pedestrian traffic. Advanced notice as to when the work will begin and when the work will be completed are required on signage provided by this contractor.
   4 Movement of construction vehicles must be approved to assure safety to existing sidewalks and the college community.

PART 2 -PRODUCTS

2.1 FORMS

A. Form Materials: Plywood, metal, metal-framed plywood, or other approved panel-type materials to provide full-depth, continuous, straight, and smooth exposed surfaces.
   1. Use flexible or uniformly curved forms for curves with a radius of 100 feet (30.5 m) or less. Do not use notched and bent forms.

B. Form-Release Agent: Commercially formulated form-release agent that will not bond with, stain, or adversely affect concrete surfaces and that will not impair subsequent treatments of concrete surfaces.

2.2 STEEL REINFORCEMENT

A. Recycled Content: Postconsumer recycled content plus one-half of preconsumer recycled content not less than 25 percent.
B. Plain-Steel Welded Wire Reinforcement: ASTM A 185/A 185M, fabricated from as-drawn steel wire into flat sheets.
C. Reinforcing Bars: ASTM A 615/A 615M, Grade 60 (Grade 420); deformed.
D. Steel Bar Mats: ASTM A 184/A 184M; with ASTM A 615/A 615M, Grade 60 (Grade 420), deformed bars; assembled with clips.
E. Plain-Steel Wire: ASTM A 82/A 82M, as drawn.
F. Deformed-Steel Wire: ASTM A 496/A 496M.

G. Joint Dowel Bars: ASTM A 615/A 615M, Grade 60 (Grade 420) plain-steel bars[; zinc coated (galvanized) after fabrication according to ASTM A 767/A 767M, Class I coating]. Cut bars true to length with ends square and free of burrs.
H. Tie Bars: ASTM A 615/A 615M, Grade 60 (Grade 420), deformed.
I. Hook Bolts: ASTM A 307, Grade A (ASTM F 568M, Property Class 4.6), internally and externally threaded. Design hook-bolt joint assembly to hold coupling against paving form and in position during concreting operations, and to permit removal without damage to concrete or hook bolt.
J. Bar Supports: Bolsters, chairs, spacers, and other devices for spacing, supporting, and fastening reinforcing bars, welded wire reinforcement, and dowels in place. Manufacture bar supports according to CRSI's "Manual of Standard Practice" from steel wire, plastic, or precast concrete of greater compressive strength than concrete specified, and as follows:
    1. Equip wire bar supports with sand plates or horizontal runners where base material will not support chair legs.
K. Zinc Repair Material: ASTM A 780.

2.3 CONCRETE MATERIALS

A. Cementitious Material: Use the following cementitious materials, of same type, brand, and source throughout Project:
    1. Portland Cement: ASTM C 150, gray portland cement Type I.
B. Normal-Weight Aggregates: ASTM C 33, Class 4S, uniformly graded. Provide aggregates from a single source with documented service-record data of at least 10 years' satisfactory service in similar paving applications and service conditions using similar aggregates and cementitious materials.
    1. Maximum Coarse-Aggregate Size: 1-1/2 inches (38 mm) nominal.
    2. Fine Aggregate: Free of materials with deleterious reactivity to alkali in cement.
C. Water: Potable and complying with ASTM C 94/C 94M.
D. Air-Entraining Admixture: ASTM C 260.
E. Chemical Admixtures: Admixtures certified by manufacturer to be compatible with other admixtures and to contain not more than 0.1 percent water-soluble chloride ions by mass of cementitious material.
    1 Water-Reducing Admixture: ASTM C 494/C 494M, Type A.
    2 Retarding Admixture: ASTM C 494/C 494M, Type B.
    3 Water-Reducing and Retarding Admixture: ASTM C 494/C 494M, Type D.
    4 High-Range, Water-Reducing Admixture: ASTM C 494/C 494M, Type F.
    5 High-Range, Water-Reducing and Retarding Admixture: ASTM C 494/C 494M, Type G.
    6 Plasticizing and Retarding Admixture: ASTM C 1017/C 1017M, Type II.

2.4 RELATED MATERIALS

A. Joint Fillers: ASTM D 1751, asphalt-saturated cellulosic fiber in preformed strips.
B. Bonding Agent: ASTM C 1059, Type II, non-redispersible, acrylic emulsion or styrene butadiene.

2.5 CONCRETE MIXTURES

A. Prepare design mixtures, proportioned according to ACI 301 (ACI 301M), for each type and strength of normal-weight concrete, and as determined by either laboratory trial mixtures or field experience.

1 Use a qualified independent testing agency for preparing and reporting proposed concrete design mixtures for the trial batch method.
2 When automatic machine placement is used, determine design mixtures and obtain laboratory test results that meet or exceed requirements.

B. Proportion mixtures to provide normal-weight concrete with the following properties:
1 Compressive Strength (28 Days): 4500 psi (31 MPa).
2 Maximum Water-Cementitious Materials Ratio at Point of Placement:
3 Slump Limit: 4 inches (100 mm), plus or minus 1 inch (25 mm). 0.45.

C. Add air-entraining admixture at manufacturer's prescribed rate to result in normal-weight concrete at point of placement having an air content as follows:
1 Air Content: 5-1/2 percent plus or minus 1.5 percent for 1-1/2-inch (38-mm) nominal maximum aggregate size.
2 Air Content: [6] [4-1/2] [3] percent plus or minus 1.5 percent for 1-inch (25-mm) nominal maximum aggregate size.
3 Air Content: [6] [5] [3-1/2] percent plus or minus 1.5 percent for 3/4-inch (19-mm) nominal maximum aggregate size.

D. Limit water-soluble, chloride-ion content in hardened concrete to 0.15 percent by weight of cement.

2.6 CONCRETE MIXING

A. Ready-Mixed Concrete: Measure, batch, and mix concrete materials and concrete according to ASTM C 94/C 94M and ASTM C 1116/C 1116M. Furnish batch certificates for each batch discharged and used in the Work.
1. When air temperature is between 85 and 90 deg F (30 and 32 deg C), reduce mixing and delivery time from 1-1/2 hours to 75 minutes; when air temperature is above 90 deg F (32 deg C), reduce mixing and delivery time to 60 minutes.

B. Project-Site Mixing: Measure, batch, and mix concrete materials and concrete according to ASTM C 94/C 94M. Mix concrete materials in appropriate drum-type batch machine mixer.
4 For concrete batches of 1 cu. yd. (0.76 cu. m) or smaller, continue mixing at least 1-1/2 minutes, but not more than 5 minutes after ingredients are in mixer, before any part of batch is released.
5 For concrete batches larger than 1 cu. yd. (0.76 cu. m), increase mixing time by 15 seconds for each additional 1 cu. yd. (0.76 cu. m).
6 Provide batch ticket for each batch discharged and used in the Work, indicating Project identification name and number, date, mixture type, mixing time, quantity, and amount of water added.

PART 3 -EXECUTION

3.1 DEMOLITION

A. Remove sidewalks as identified using equipment and machinery required to safely dislodge and remove from site.
B. Great care must be taken to assure no damage is incurred to adjoining sidewalks, light fixtures, trees and minimal disturbance to landscaping and lawn areas. Repair all disturbed areas immediately after work of each area is done.

C. All debris is to be hauled from the site on a daily basis.

3.2 EXAMINATION

A. Examine exposed subgrades and subbase surfaces for compliance with requirements for dimensional, grading, and elevation tolerances.
B. Proof-roll prepared subbase surface below concrete pavings to identify soft pockets and areas of excess yielding.
    1 Completely proof-roll subbase in one direction and repeat in perpendicular direction. Limit vehicle speed to 3 mph (5 km/h).
    2 Proof-roll with a pneumatic-tired and loaded, 10-wheel, tandem-axle dump truck weighing not less than 15 tons (13.6 tonnes).
    3 Correct subbase with soft spots and areas of pumping or rutting exceeding depth of 1/2 inch (13 mm) according to requirements in Section 312000 "Earth Moving."
C. Proceed with installation only after unsatisfactory conditions have been corrected.

3.3 PREPARATION

A. Remove loose material from compacted subbase surface immediately before placing concrete.

3.4 GENERAL INSTALLATION

A. All sidewalks and intersections are to contain 6” packed 3/4” clean crushed aggregate over compacted sub grade.
B. Concrete is to be 4,000 psi, rated class C and air entrained with fly ash. A 15% Class C fly ash mix is suggested, similar to a 1# fly ash to 1# cement ratio. Submit concrete mix design to TCNJ for approval and provide delivery tickets for each day’s placement of concrete.
C. 6x6 WWF Reinforcing is to be installed in low one-third of all concrete walks (only if there is no re-bar).
B. Expansion joints are to be placed a maximum of 20’ on center utilizing preformed expansion joint material, PVC pipe for re-bar continuation, minimum 1/2” thick.
D. Pavement slope: (See grading plan, otherwise minimum 1/8” per foot if not on drawings).
E. Create 1/2” radius along outside edge by use of an appropriate edging tool. Intermediate lines and details to match the existing prior to removal. Take pictures in order to assist in duplicating the work.
F. Appropriate sealer to be applied to all new concrete via 1/2” smooth dowels at a minimum of 12” into the adjacent concrete and epoxy solid into the concrete, with a minimum of 12” into the new concrete.
G. Topsoil and seed / hay (or mulch) per existing conditions all edges of new walkways immediately upon final cleanup of each area.

3.5 EDGE FORMS AND SCREED CONSTRUCTION

A. Set, brace, and secure edge forms, bulkheads, and intermediate screed guides to required lines, grades, and elevations. Install forms to allow continuous progress of work and so forms can remain in place at least 24 hours after concrete placement.
B. Clean forms after each use and coat with form-release agent to ensure separation from concrete without damage.

3.6 STEEL REINFORCEMENT

A. General: Comply with CRSI's "Manual of Standard Practice" for fabricating, placing, and supporting reinforcement.
B. Clean reinforcement of loose rust and mill scale, earth, ice, or other bond-reducing materials.
C. Arrange, space, and securely tie bars and bar supports to hold reinforcement in position during concrete placement. Maintain minimum cover to reinforcement.
D. Install welded wire reinforcement in lengths as long as practicable. Lap adjoining pieces at least one full mesh, and lace splices with wire. Offset laps of adjoining widths to prevent continuous laps in either direction.
E. Zinc-Coated Reinforcement: Use galvanized-steel wire ties to fasten zinc-coated reinforcement. Repair cut and damaged zinc coatings with zinc repair material.
F. Epoxy-Coated Reinforcement: Use epoxy-coated steel wire ties to fasten epoxy-coated reinforcement. Repair cut and damaged epoxy coatings with epoxy repair coating according to ASTM D 3963/D 3963M.
G. Install fabricated bar mats in lengths as long as practicable. Handle units to keep them flat and free of distortions. Straighten bends, kinks, and other irregularities, or replace units as required before placement. Set mats for a minimum 2-inch (50-mm) overlap of adjacent mats.

3.7 JOINTS

A. General: Form construction, isolation, and contraction joints and tool edges true to line, with faces perpendicular to surface plane of concrete. Construct transverse joints at right angles to centerline unless otherwise indicated.
    1. When joining existing paving, place transverse joints to align with previously placed joints unless otherwise indicated.
C. Construction Joints: Set construction joints at side and end terminations of paving and at locations where paving operations are stopped for more than one-half hour unless paving terminates at isolation joints.
    1 Continue steel reinforcement across construction joints unless otherwise indicated. Do not continue reinforcement through sides of paving strips unless otherwise indicated.
    2 Provide tie bars at sides of paving strips where indicated.
    3 Butt Joints: Use bonding agent at joint locations where fresh concrete is placed against hardened or partially hardened concrete surfaces.
    4 Keyed Joints: Provide preformed keyway-section forms or bulkhead forms with keys unless otherwise indicated. Embed keys at least 1¬1/2 inches (38 mm) into concrete.
    5 Doweled Joints: Install dowel bars and support assemblies at joints where indicated. Lubricate or coat with asphalt one-half of dowel length to prevent concrete bonding to one side of joint.

D. Isolation Joints: Form isolation joints of preformed joint-filler strips abutting concrete curbs, catch basins, manholes, inlets, structures, other fixed objects, and where indicated.
    1 Locate expansion joints at intervals of 50 feet (15.25 m) unless otherwise indicated.
    2 Extend joint fillers full width and depth of joint.
    3 Terminate joint filler not less than 1/2 inch (13 mm) or more than 1 inch (25 mm) below finished surface if joint sealant is indicated.

4 Place top of joint filler flush with finished concrete surface if joint sealant is not indicated.
5 Furnish joint fillers in one-piece lengths. Where more than one length is required, lace or clip joint-filler sections together.
6 During concrete placement, protect top edge of joint filler with metal, plastic, or other temporary preformed cap. Remove protective cap after concrete has been placed on both sides of joint.

E. Edging: After initial floating, tool edges of paving, gutters, curbs, and joints in concrete with an edging tool to a 1/4-inch (6-mm) radius. Repeat tooling of edges after applying surface finishes. Eliminate edging-tool marks on concrete surfaces.

3.8 CONCRETE PLACEMENT

A. Before placing concrete, inspect and complete formwork installation, steel reinforcement, and items to be embedded or cast-in.
B. Remove snow, ice, or frost from sub-base surface and steel reinforcement before placing concrete. Do not place concrete on frozen surfaces.
C. Moisten sub-base to provide a uniform dampened condition at time concrete is placed. Do not place concrete around manholes or other structures until they are at required finish elevation and alignment.
D. Comply with ACI 301 (ACI 301M) requirements for measuring, mixing, transporting, and placing concrete.
E. Do not add water to concrete during delivery or at Project site. Do not add water to fresh concrete after testing.
F. Deposit and spread concrete in a continuous operation between transverse joints. Do not push or drag concrete into place or use vibrators to move concrete into place.
G. Consolidate concrete according to ACI 301 (ACI 301M) by mechanical vibrating equipment supplemented by hand spading, rodding, or tamping.
    1. Consolidate concrete along face of forms and adjacent to transverse joints with an internal vibrator. Keep vibrator away from joint assemblies, reinforcement, or side forms. Use only square-faced shovels for hand spreading and consolidation. Consolidate with care to prevent dislocating reinforcement and joint devices.
H. Screed paving surface with a straightedge and strike off.
I. Commence initial floating using bull floats or darbies to impart an open-textured and uniform surface plane before excess moisture or bleed water appears on the surface. Do not further disturb concrete surfaces before beginning finishing operations or spreading surface treatments.
J. Curbs and Gutters: Use design mixture for automatic machine placement. Produce curbs and gutters to required cross section, lines, grades, finish, and jointing.
K. Cold-Weather Placement: Protect concrete work from physical damage or reduced strength that could be caused by frost, freezing, or low temperatures. Comply with ACI 306.1 and the following:
    1 When air temperature has fallen to or is expected to fall below 40 deg F (4.4 deg C), uniformly heat water and aggregates before mixing to obtain a concrete mixture temperature of not less than 50 deg F (10 deg C) and not more than 80 deg F (27 deg C) at point of placement.
    2 Do not use frozen materials or materials containing ice or snow.
    3 Do not use calcium chloride, salt, or other materials containing antifreeze agents or chemical accelerators unless otherwise specified and approved in design mixtures.

L. Hot-Weather Placement: Comply with ACI 301 (ACI 301M) and as follows when hot-weather conditions exist:
    1 Cool ingredients before mixing to maintain concrete temperature below 90 deg F (32 deg C) at time of placement. Chilled mixing water or chopped ice may be used to control temperature, provided water equivalent of ice is calculated in total amount of mixing water. Using liquid nitrogen to cool concrete is Contractor's option.
    2 Cover steel reinforcement with water-soaked burlap so steel temperature will not exceed ambient air temperature immediately before embedding in concrete.
    3 Fog-spray forms, steel reinforcement, and subgrade just before placing concrete. Keep subgrade moisture uniform without standing water, soft spots, or dry areas.

3.9 FLOAT FINISHING

A. General: Do not add water to concrete surfaces during finishing operations.
B. Float Finish: Begin the second floating operation when bleed-water sheen has disappeared and concrete surface has stiffened sufficiently to permit operations. Float surface with power-driven floats or by hand floating if area is small or inaccessible to power units. Finish surfaces to true planes. Cut down high spots and fill low spots. Refloat surface immediately to uniform granular texture.
    1 Burlap Finish: Drag a seamless strip of damp burlap across float-finished concrete, perpendicular to line of traffic, to provide a uniform, gritty texture.
    2 Medium-to-Fine-Textured Broom Finish: Draw a soft-bristle broom across float-finished concrete surface perpendicular to line of traffic to provide a uniform, fine-line texture.
    3 Medium-to-Coarse-Textured Broom Finish: Provide a coarse finish by striating float-finished concrete surface 1/16 to 1/8 inch (1.6 to 3 mm) deep with a stiff-bristled broom, perpendicular to line of traffic.

3.10 CONCRETE PROTECTION AND CURING

A. General: Protect freshly placed concrete from premature drying and excessive cold or hot temperatures.
B. Comply with ACI 306.1 for cold-weather protection.
C. Evaporation Retarder: Apply evaporation retarder to concrete surfaces if hot, dry, or windy conditions cause moisture loss approaching 0.2 lb/sq. ft. x h (1 kg/sq. m x h) before and during finishing operations. Apply according to manufacturer's written instructions after placing, screeding, and bull floating or darbying concrete but before float finishing.
D. Begin curing after finishing concrete but not before free water has disappeared from concrete surface.

3.11 CONCRETE DETAILS (LESS THAN 8 FEET WIDE)

A. Concrete is to be 5 inches thick across entire slab.
B. Concrete sidewalk, 4,000 psi class C air entrained with 6”x6” WWM in lower one-third of slab.
C. 1/2” preformed joint filler expansion joints as required.

3.12 PAVING TOLERANCES

A. Comply with tolerances in ACI 117 and as follows:
    1. Elevation: 3/4 inch (19 mm).
    2. Thickness: Plus 3/8 inch (10 mm), minus 1/4 inch (6 mm).

3. Surface: Gap below 10-foot-(3-m-) long, unleveled straightedge not to exceed 1/2 inch (13 mm).
4. Alignment of Tie-Bar End Relative to Line Perpendicular to Paving Edge: 1/2 inch per 12 inches (13 mm per 300 mm) of tie bar.
5. Lateral Alignment and Spacing of Dowels: 1 inch (25 mm).
6. Vertical Alignment of Dowels: 1/4 inch (6 mm).
7. Alignment of Dowel-Bar End Relative to Line Perpendicular to Paving Edge: 1/4 inch per 12 inches (6 mm per 300 mm) of dowel.
8. Joint Spacing: 3 inches (75 mm).
9. Contraction Joint Depth: Plus 1/4 inch (6 mm), no minus.
10. Joint Width: Plus 1/8 inch (3 mm), no minus.

3.13 FIELD QUALITY CONTROL

A. Testing Agency: Engage a qualified testing agency to perform tests and inspections.
B. Testing Services: Testing of composite samples of fresh concrete obtained according to ASTM C 172 shall be performed according to the following requirements:
   1. Testing Frequency: Obtain at least one composite sample for each 100 cu. yd. (76 cu. m) or fraction thereof of each concrete mixture placed each day.
      a. When frequency of testing will provide fewer than five compressive-strength tests for each concrete mixture, testing shall be conducted from at least five randomly selected batches or from each batch if fewer than five are used.
   2. Slump: ASTM C 143/C 143M; one test at point of placement for each composite sample, but not less than one test for each day's pour of each concrete mixture. Perform additional tests when concrete consistency appears to change.
   3. Air Content: ASTM C 231, pressure method; one test for each composite sample, but not less than one test for each day's pour of each concrete mixture.
   4. Concrete Temperature: ASTM C 1064/C 1064M; one test hourly when air temperature is 40 deg F (4.4 deg C) and below and when it is 80 deg F (27 deg C) and above, and one test for each composite sample.
   5. Compression Test Specimens: ASTM C 31/C 31M; cast and laboratory cure one set of three standard cylinder specimens for each composite sample.
   6. Compressive-Strength Tests: ASTM C 39/C 39M; test one specimen at seven days and two specimens at 28 days.
      a. A compressive-strength test shall be the average compressive strength from two specimens obtained from same composite sample and tested at 28 days.
B. Strength of each concrete mixture will be satisfactory if average of any three consecutive compressive-strength tests equals or exceeds specified compressive strength and no compressive-strength test value falls below specified compressive strength by more than 500 psi (3.4 MPa).
C. Test results shall be reported in writing to Engineer, concrete manufacturer, and Contractor within 48 hours of testing. Reports of compressive-strength tests shall contain Project identification name and number, date of concrete placement, name of concrete testing and inspecting agency, location of concrete batch in Work, design compressive strength at 28 days, concrete mixture proportions and materials, compressive breaking strength, and type of break for both 7-and 28-day tests.
D. Nondestructive Testing: Impact hammer, sonoscope, or other nondestructive device may be permitted by Engineer but will not be used as sole basis for approval or rejection of concrete.

E. Additional Tests: Testing and inspecting agency shall make additional tests of concrete when test results indicate that slump, air entrainment, compressive strengths, or other requirements have not been met, as directed by Engineer.
F. Concrete paving will be considered defective if it does not pass tests and inspections.
G. Additional testing and inspecting, at Contractor's expense, will be performed to determine compliance of replaced or additional work with specified requirements.
H. Prepare test and inspection reports.

3.14 REPAIRS AND PROTECTION

A. Remove and replace concrete paving that is broken, damaged, or defective or that does not comply with requirements in this Section. Remove work in complete sections from joint to joint unless otherwise approved by Engineer.
B. Drill test cores, where directed by Engineer, when necessary to determine magnitude of cracks or defective areas. Fill drilled core holes in satisfactory paving areas with portland cement concrete bonded to paving with epoxy adhesive.
C. Protect concrete paving from damage. Exclude traffic from paving for at least 14 days after placement. When construction traffic is permitted, maintain paving as clean as possible by removing surface stains and spillage of materials as they occur.
D. Maintain concrete paving free of stains, discoloration, dirt, and other foreign material. Sweep paving not more than two days before date scheduled for Substantial Completion inspections.

END OF SECTION 033200

SECTION 033300 - INTEGRALLY COLORED CONCRETE

PART 1 - GENERAL

1.1 SUMMARY

A. Drawings and general provisions of Contract, including General and Supplementary Conditions and Division 1 Specification sections, apply to Work of this Section.

B. Section Includes:
   1. Integrally colored concrete roads
   2. Curing of integrally colored concrete.

C. Related Sections:
   1. Division 3 Section "Cast-In-Place Concrete" for general applications of concrete and coordination of sample submittal.

REFERENCES

D. American Concrete Institute (ACI):
   1. ACI 301 "Specification for Structural Concrete for Buildings."
   2. ACI 302 IR "Recommended Practice for Concrete Floor and Slab Construction."
   3. ACI 303.1 "Standard Specification for Cast-In-Place Architectural Concrete."
   4. ACI 304 "Recommended Practice for Measuring, Mixing, Transporting and Placing of Concrete."
   5. ACI 305R "Recommended Practice for Hot Weather Concreting."
   6. ACI 306R "Recommended Practice for Cold Weather Concreting."

E. American Society for Testing and Materials (ASTM):
   1. ASTM C309 "Liquid Membrane-Forming Compounds for Curing Concrete."
   2. ASTM C494 "Standard Specification for Chemical Admixtures for Concrete."
   3. ASTM C979 "Standard Specification for Pigments for Integrally Colored Concrete."

F. American Association of State Highway and Transportation Officials (AASHTO):
   1. AASHTO M194 "Chemical Admixtures."

1.2 SUBMITTALS

A. Product Data: Submit manufacturer’s complete technical data sheets for the following:
   1. Colored admixture.
   2. Curing compound.

B. Design Mixes: For each type of integrally colored concrete.

C. Samples for Initial Selection: Manufacturer's color charts showing full range of colors available.

D. Qualification Data: For firms indicated in "Quality Assurance" Article, including list of completed projects.

1.3 QUALITY ASSURANCE

A. Manufacturer Qualifications: Manufacturer with 10-years' experience in the production of specified products.

B. Installer Qualifications: An installer with minimum 5-years' experience with work of similar scope and quality.

C. Comply with the requirements of ACI 301.

D. Obtain each specified material from same source and maintain high degree of consistency in workmanship throughout Project.

E. Notification of manufacturer's authorized representative shall be given at least 1-week before start of Work.

F. Integrally Colored Concrete Mockups:
   1. Provide under provisions of Division 1 Section "Quality Control 03130".
   2. At location on Project selected by owner, place and finish a 10 feet by 10 feet area depicting all three colors as specified on the drawings.
   3. For accurate color, the quantity of concrete mixed to produce the sample should not be less than 3 cubic yards (or not less than 1/3 the capacity of the mixing drum on the ready-mix truck) and should always be in full cubic yard increments. Excess material shall be discarded according to local regulations.
   4. Construct mockup using processes and techniques intended for use on permanent work, including curing procedures. Include samples of control, construction, and expansion joints in sample panels. Mockup shall be produced by the individual workers who will perform the work for the Project.
   5. Retain samples of cements, sands, aggregates and color additives used in mockup for comparison with materials used in remaining work.
   6. Accepted mockup provides visual standard for work of Section.
   7. Mockup shall remain through completion of work for use as a quality standard for finished work.
   8. Remove mockup when directed.

1.4 DELIVERY, STORAGE AND HANDLING

A. Colored Admixture: Comply with manufacturer's instructions. Deliver colored admixtures in original, unopened packaging. Store in dry conditions.

1.5 PROJECT CONDITIONS

A. Integrally Colored Concrete Environmental Requirements:
   1. Schedule placement to minimize exposure to wind and hot sun before curing materials are applied.
   2. Avoid placing concrete if rain, snow, or frost is forecast within 24-hours. Protect fresh concrete from moisture and freezing.
   3. Comply with professional practices described in ACI 305R and ACI 306R.

B. Schedule delivery of concrete to provide consistent mix times from batching until discharge. Mix times shall meet manufacturer's written recommendations.

1.6 PRE-JOB CONFERENCE

A. One week prior to placement of integrally colored concrete the contractor shall coordinate a meeting to discuss the Project and application materials.

B. It is suggested that the Landscape Architect, General Contractor, Owner, Subcontractor, Ready-Mix Concrete Representative, and a Manufacturer's Representative be present.

PART 2 - PRODUCTS

2.1 ACCEPTABLE MANUFACTURERS

A. **BASIS OF DESIGN:** L. M. SCOFIELD COMPANY, Douglasville, Georgia and Los Angeles, California (800) 800-9900 or the appropriate local contact: Eastern Division – 201-672-9050;

B. **OTHER MANUFACTURERS**
1. Butterfield Color
2. Davis Colors
3. Solomon Colors
4. BASF
5. Or Equivalent

2.2 MATERIALS

A. **BASIS OF DESIGN:** Colored Admixture for Integrally Colored Concrete: CHROMIX P® Admixture and CHROMIX ML®; L. M. SCOFIELD COMPANY. OR EQUIVALENT
1. Admixture shall be a colored, water-reducing, admixture containing no calcium chloride with coloring agents that are limeproof and ultra-violet resistant.
2. Colored admixture shall conform to the requirements of ACI 303.1, ASTM C979, ASTM C494 and ASSHTO M194.

B. **BASIS OF DESIGN:** Curing Compound for Integrally Colored Concrete: Curing compound shall comply with ASTM C309 and be of same manufacturer as colored admixture, for use with integrally colored concrete OR EQUIVALENT
1. Exterior Integrally Colored Concrete: LITHOCHROME® COLORWAX; L. M. SCOFIELD COMPANY. Use to cure exterior flatwork that will be allowed to cure naturally with only occasional maintenance.
2. Interior Integrally Colored Concrete: COLORCURE® (Pigmented) or CEMENTONE® (Clear); L. M. SCOFIELD COMPANY OR EQUIVALENT. Use to cure interior flatwork that will receive regular maintenance.

C. SUBSTITUTIONS: The use of products other than those specified will be considered providing that the Contractor requests its use as specified in the General Conditions specifications. This request shall be accompanied by the following:
1. A certificate of compliance from material manufacturer stating that proposed products meet or exceed requirements of this Section, including standards ACI 303.1, ASTM C979, ASTM C494 and AASHTO M194.
2. Documented proof that proposed materials have a 10-year proven record of performance, confirmed by at least 5 local projects that Landscape Architect can examine.

2.3 COLORS

A. Concrete Color[s]: Provide cement, sand, aggregate and colored admixture as required to match existing sidewalks on campus.

B. Curing Compound: Color to match integrally colored concrete.

C. OWNER shall choose color from manufacturer's full range of colors.

2.4 CONCRETE MIX DESIGN

A. SEE SECTION 33200 - CONCRETE PAVING.

B. Slump of concrete shall be consistent throughout Project at 4-inches or less. At no time shall slump exceed 5-inches.

C. Do not add calcium chloride to mix as it causes mottling and surface discoloration.

D. Supplemental admixtures shall not be used unless approved by manufacturer.

E. Do not add water to the mix in the field.

F. Add colored admixture to concrete mix according to manufacturer's written instructions.

PART 3 - EXECUTION

3.1 INSTALLATION

A. Install concrete according to requirements of Division 3 Section "CONCRETE PAVING."

B. Do not add water to concrete mix in the field.

C. Surfaces shall be finished uniformly with the following finish:
   1. Broomed: Pull broom across freshly floated concrete to produce medium texture in straight lines perpendicular to main line of traffic. Do not dampen brooms.

3.2 CURING

A. Integrally Colored Concrete: Apply curing compound for integrally colored concrete according to manufacturer's instructions using manufacturer's recommended application techniques. Apply [curing] [curing and sealing] compound at consistent time for each pour to maintain close color consistency.

B. Curing compound shall be same color as the colored concrete and supplied by same manufacturer of the colored admixture.

C. Precautions shall be taken in hot weather to prevent plastic cracking resulting from excessively rapid drying at surface as described in CIP 5 *Plastic Shrinkage Cracking* published by the National Ready Mixed Concrete Association.

D. Do not cover concrete with plastic sheeting.

3.3 TOLERANCES

A. Minor variations in appearance of integrally colored concrete, which are similar to natural variations in color and appearance of uncolored concrete, are acceptable.

END OF SECTION 033300

042200 - UNIT MASONRY

PART 1 - GENERAL

1.1 RELATED DOCUMENTS

A. Drawings and general provisions of the Contract, including General and Supplementary Conditions and Division 1 Sections, apply to work of this section.

1.2 SUMMARY

A. This section includes the following:
B. Brick unit masonry

1.3 SUBMISSIONS

A. Submit each item in this article according to the conditions of the contract and Division 1 specifications sections:
   1. Product data for each different masonry unit, accessory and other manufactured product indicated.

   2. Samples for initial selection of the following:

      a. Unit masonry samples in small scale form showing full range of colors and textures available for each different exposed masonry unit required
      b. Colored masonry mortar samples showing the full range of colors available

   3. Samples for verification purposes of the following:

      a. Full size units for each different exposed masonry unit required showing the full range of exposed colors, textures and dimensions to be expected in the completed construction

         1.) Include size variation data for Type FBS brick verifying that actual range of sizes for brick falls within ASTM C216 dimension tolerances
         2.) Colored masonry mortar samples for each color required showing the full range of colors expected in the finished construction. Make samples using the same sand and mortar ingredients to be used on the project. Label samples to indicate type and amount of colorant used
         3.) Accessories embedded in masonry

   4. Material certificates for the following, signed by manufacturer and Contractor, certifying that each material complies with requirements.

      a. Each different cement product required for mortar and grout including name of manufacturer, brand, type and weight slips at time of delivery
      b. Each material and grade indicated for reinforcing bars
      c. Each type and size of joint reinforcement.
      d. Each type and size of anchors, ties and metal accessories

   5. Material test reports from a qualified independent testing agency, employed and paid by Contractor or manufacturer, indicating and interpreting test results relative to compliance of the following proposed masonry materials with requirements indicated:

a. Mortar complying with property requirements of ASTM C270
b. Grout mixes. Include description of type and proportions of grout ingredients.
c. Masonry units

6. Qualification data for firms and persons specified in Quality Assurance article to demonstrate their capabilities and experience. Include lists of completed projects with project names and addresses, and addresses of architects and owners, and other information specified.

1.4 QUALITY ASSURANCE

A. Employ and pay a qualified professional engineer to provide a survey and inspection of foundations for compliance with dimensional tolerances

B. To qualify for acceptance, an independent testing agency shall demonstrate to Architect's satisfaction, based on evaluation of agency submitted criteria conforming to ASTM CI093, that it has the experience and capability to satisfactorily conduct the testing indicated without delaying the work

C. Employ and pay a qualified independent testing agency to perform the following construction testing to establish compliance of proposed materials and construction with specified requirements:

1. For each different clay masonry unit indicated, test units per ASTM C67.
2. For each different concrete masonry unit indicated, test units for strength, absorption and moisture content per ASTM C140
3. Test mortar properties per test methods of ASTM C270
4. Evaluate mortar composition and properties per ASTM C780
5. Test grout compressive strength per ASTM C1019

D. Obtain exposed masonry units of uniform texture and color, or a uniform blend within the ranges accepted for these characteristics, from one source and by a single manufacturer for each different product required

E. Obtain mortar ingredients of uniform quality, including color for exposed masonry, from one manufacturer for each cementitious component and from one source or producer for each aggregate

F. Conduct conference at proj ect site to comply with requirements of project meetings section of Division 1.

1.5 DELIVERY, STORAGE & HANDLING

A. store masonry materials on elevated platforms, under cover and in a dry location to prevent their deterioration or damage due to moisture, temperature changes,
contaminants, corrosion and other causes. If units become wet, do not install until they are in and air dried condition.

B. Store cementitious material on elevated platforms, under cover and in dry location.

C. Store aggregates where grading and other required characteristics can be maintained and contamination avoided.

D. Store masonry accessories, including metal items, to prevent corrosion and accumulation of dirt and oil

1.6 PROJECT CONDITIONS

A. During erection, cover tops of sills with waterproof sheeting work. Cover partially completed walls, projections and at end of each day's masonry when construction is not in progress

1. Extend cover a minimum of 24" (600 mm) down both sides and hold cover securely in place

B. Prevent grout, mortar or soil from staining the face of masonry to be left exposed. Immediately remove grout, mortar and soil that come in contact with such masonry.

1. Protect base of walls from rain splashed mud and mortar splatter with coverings spread on ground and over wall surface.
2. Protect sills, ledges and projections from mortar droppings
3. Protect surfaces of window and door frames, as well as similar products with painted and integral finishes, from mortar droppings.
4. Turn scaffold boards near the wall on edge at the end of each day to prevent rain from splashing mortar and dirt on completed masonry.

C. Do not use frozen materials or materials mixed or coated with ice or frost. Do not build on frozen subgrade or setting beds. Remove and replace unit masonry damaged by frost or freezing conditions. Comply with the following requirements:

1. When the ambient temperature is within the limits indicated, use the following procedures:

   a. 40°F to 32°F (4°C to O°C); heat mixing water or sand to produce mortar temperatures between 40°F and 120°F (4°C and 49°C).
   b. 32°F to 25°F (O°C to -4°C); heat mixing water and sand to produce mortar temperatures between 40°F and 120°F (4.4°C and 49°C). Heat grout materials to produce grout temperatures between 40°F and 120°F (4°C and 49°C. Maintain mortar and grout above freezing until used in masonry.
   c. 25°F to 20°F (-4°C to -7°C); heat mixing water and sand to produce mortar temperatures between 40°F and 120°F (4°C and 49°C). Heat grout materials to produce grout temperatures between 40°F and 120°F (4°C and 49°C). Maintain mortar and grout above freezing until used in masonry. Heat masonry units to 40°F (4°C) if grouting. Use heat on both sides of walls under construction.
   d. 20°F (-7°C) and below; heat mixing water and sand to produce mortar temperatures between 40°F and 120°F (4°C and 49°C) . Heat grout materials to produce grout temperatures between 40°F and 120°F (4°C and 49°C). Maintain mortar and grout above freezing until used in masonry. Heat masonry units to 40°F (4°C). Provide enclosures on both sides of walls under construction to maintain temperatures above 32°F (O°C) with in the enclosures.

2. When the mean daily temperature is within the limits indicated, provide the following protection:

   a. 40°F to 25°F (4°C to -4°C); cover masonry with a weather resistant membrane for 48 hours after construction.

b. 25°F to 20°F (-4°C to -7°C); cover masonry with insulating blankets or provide enclosure and heat for 48 hours after construction to prevent freezing. Install wind breaks when wind velocity exceeds 15 mph (25 km/ h).
c. 20°F (-7°C) and below; provide enclosure and heat to maintain temperatures above 32°F (O°C) within the enclosure for 48 hours after construction.

3. Use liquid cleaning methods only when air temperature is 40°F (4° C) and above and will remain so until masonry has dried out, but not less than 7 days after completion of cleaning.

D. Protect unit masonry work when temperature and humidity conditions produce excessive evaporation of water from mortar and grout. Provide artificial shade and wind breaks and use cooled materials as required . Do not apply mortar to substrates with temperatures of 100°F (38° C) and above.

PART 2 - PRODUCTS

2.1 MANUFACTURERS

A. Subject to compliance with requirements, products that may be incorporated in the work include, but are not limited to, the following:

1. Concrete masonry units;
   Anchor Concrete Products Inc.
   Dillan & Co.
   E.P. Henry corp.
   Fizzano Bros.
   Landis Bros.
   New Holland
   Smithtown Concrete Products Corp .
   Supreme Concrete Block, Inc .
   Or Equivalent

2. Brick;
   Acme Brick Co.
   Belden Brick Co.
   Cherokee Sanford Group, Inc.
   Victor Cushwa & Sons, Inc.
   Diener Brick Co.
   Endicott Clay Products Co.
   Glen- Gery Corp .
   O.W. Ketchum Co.
   Taylor Clay Products
   Or Equivalent

3. Portland cement and lime;
   Essroc Materials, Inc.
   Glen- Gery Corp.
   Lafarge Corp.
   Lehigh Portland Cement Co.
   Riverton Corp.
   Or Equivalent

4. Mortar pigments;
   Davis Colors
   Lafarge corp.
   Solomon Grind-Chern Services, Inc.
   Or Equivalent

5. Joint reinforcement, ties and anchors;
   Dur-O-Wal, Inc.
   Heckman Building Products, Inc.
   Hohmann & Barnard, Inc.
   Masonry Reinforcing Corp. of America
   National Wire Products Ind.
   Southern Construction Products
   Or Equivalent

2.2 CONCRETE MASONRY UNITS

A. Provide shapes indicated and as follows for each form of concrete masonry unit required:

1. Provide special shapes for lintels, corners, jambs, sash, control joints, headers, bonding and other special conditions.
2. Provide square edge units for outside corner

B. Concrete Masonry units: ASTM C90 and as follows:

1. Unit compressive strength; provide units with minimum average net area compressive strength indicated below;

   a. 1900 psi (13.1 MPa)
   b. Weight classification; normal weight
   c. Provide Type I, moisture controlled units
   d. Size; manufactured to specified dimensions of 3/ 8" less than nominal widths by nominal heights by nominal lengths indicated on drawings.
   e. Exposed faces; manufacturer's standard color and texture, unless otherwise indicated

2.3 BRICK

A. Provide shapes indicated and as follows for each form of brick require.

1. Provide units without cores or frogs and with exposed surfaces finished for ends of sills, caps, and similar applications that other wise would expose unfinished brick surfaces.

2. Provide special shapes for applications requiring brick of size, form, color and texture on exposed surfaces that cannot be produced by sawing.

   a. Provide special shapes for applications where stretcher units cannot accommodate special conditions including those at corners, movement joints, bond beams, sashes and lintels.

   b. Provide special shapes for applications where shapes produced by sawing would result in sawed surfaces being exposed to view.

3. Face Brick: ASTM C2l6 and as follows:

a. Grade and minimum average net area compressive strength indicated below;

1.) Grade SW.
2.) 8000 psi (55.2 MPa)

b. Initial rate of absorption between 5 and 20 g/30 sq. in. (g/ 194 sq. cm) per minute when tested per ASTM C67

c. Brick with surface coloring, other than flashed or sand finished brick, shall withstand 50 cycles of freezing and thawing per ASTM C67 with no observable difference in the applied finish when viewed from 10 ft. (3 m).

d. Type; FBS

e. Size; bricks manufactured to the following actual dimensions within tolerances specified in ASTM C216:

1.) Standard; 3- 1/2 " to 3- 5/8 " (89 mm to 92 mm) thick x 2- 1/4 " (57 mm) high by 7- 5/8 " (203 mm) long.

f. Application; use where brick is exposed

g. Style, Color and texture: Red Molded Style, Glen Gery 51-DDX or Equivalent

2.4 MORTAR & GROUT MATERIALS

A. Portland Cement: ASTM C150, Type I or II, except Type III may be used for cold weather construction. Provide natural color or white cement as required to produce mortar color indicated

B. Hydrated Lime: ASTM C207, Type S.

C. Portland Cement Lime Mix: Packaged blend of Portland cement complying with ASTM C150, Type I or Type III, and hydrated lime complying with ASTM C207.

a. For pigmented mortars, use colored portland cement lime mix of formulation required to produce color indicated or, if not indicated, as selected from manufacturer's standard formulations. Pigments shall not exceed 10% of portland cement by weight for mineral oxides nor 2% for carbon black.

D. Aggregate for Mortar: ASTM C144

E. Aggregate for Grout: ASTM C404

F. Mortar Pigments: Natural and synthetic iron oxides and chromium oxides, compounded for use in mortar mixes. Use only pigments with a record of satisfactory performance in masonry mortars. Provide color as selected by Architect from manufacturer's full range.

G. Ready Mixed Mortar: Cementitious materials, water and aggregate complying with requirements specified in this article, combined with set controlling admixtures to produce a ready mixed mortar complying with ASTM Cl142.

H. Water: Clean and potable.

I. Subject to compliance with requirements, manufacturers offering products which may be incorporated in the work include, but are not limited to, the following:
   a. Colored portland cement lime mix;
      Color Mortar Blend; Glen-Gery corp.
      Centurion Colorbond PL; Lafarge corp.
      Lehigh Custom Color Portland/Lime; Lehigh Portland Cement Co.
      Riverton Portland Cement Lime Custom Color; The Riverton Corp.
      Or Equivalent

   b. Mortar pigments;
      True Tone Mortar Colors ; Davis Colors
      Centurion Pigments; Lafarge Corp.
      SGS Mortar Colors; Solomon Grind-Chern Services, Inc.
      Or Equivalent

2.5 REINFORCING STEEL

A. Steel Reinforcing Bars: Material and grade as follows;

   1. Billet steel complying with ASTM A615 (A615M)

B. Grade 60 (Grade 400), deformed

2.6 JOINT REINFORCEMENT

A. Provide joint reinforcement formed from the following:

   1. Galvanized carbon steel wire, coating class as follows:

      a. ASTM A153, Class B-2, for both interior and exterior walls

B. Provide welded wire units prefabricated with deformed, continuous, side rods and plain, cross rods into straight lengths of not less than 10 ft. (3 m), with prefabricated corner and T units, and complying with requirements indicated below:

   1. Wire diameter for side rods; 0.1875 " (4.8 mm) .
   2. Wire diameter for cross rods; 0.1875 " (4.8 mm) .

C. For single wythe masonry, provide type as follows with single pair of side rods:

   1. Ladder design with perpendicular, cross rods spaced not more than 16" o.c. (407 mm) or truss design with continuous, diagonal, cross rods spaced not more than 16" o.c. (407 mm).

2.7 TIES & ANCHORS, GENERAL

A. Provide ties and anchors specified in subsequent articles that comply with requirements for metal and size of this article, unless otherwise indicated.

B. Wire: As follows:

   1. Galvanized carbon steel wire: ASTM A82 , with ASTM A153, Class B- 2 coating .

a. Wire diameter: 0 .1875 " (4. 8 mm)

C. Steel Sheet: As follows:

1. Galvanized steel sheet: ASTM A366 (A366M) , commercial quality, cold rolled, carbon steel sheet, hot dip galvanized after fabrication to comply with ASTM A153, Class B- 2 or B- 3, as app1 i cable, for sheet metal ties and anchors.

D. Thickness of Steel Sheet Galvanized After Fabrication: Uncoated thickness of steel sheet for hot dip galvanizing after fabrication:

.

1. 0.0598 " (1. 5 mm)

2.8 RIGID ANCHORS FOR ATTACHMENT TO EXISTING CONSTRUCTION

A. Fabricate from steel bars as follows:

1. 1- 1/ 2 " (38 mm) wide x 1/ 4 " (6.4 mm) thick x 24 " (600 mm) long, with ends turned up 2 " (50 mm) or with cross pins

.

2.9 ADJUSTABLE MASONRY VENEER ANCHORS

B. Provide 2 piece assemblies a ll owing vertical or horizontal differential movement between wall and wall framing parallel to plane of wall, but resisting tension and compression forces perpendicular to it, for attachment over sheathing to wood studs and with the following structural performance characteristics:

1. Structural performance characteristics: capable of withstanding a 100 lbf (445 N) load in either tension or compression without deforming over or developing play in excess of, 0.05 " (1.3 mm)

C. Screw Attached Masonry Veneer Anchors: Units consisting of wire tie section and metal anchor section complying with the following requirements:

1. Wire tie shape: triangular
2. Wire tie length: as required to ext end 1-1/ 2 " (38 mm) into masonry wythe of veneer face.
3. Anchor section; gasketed, sheet metal plate with screw holes top and bottom, top and bottom ends bent to form pronged legs to bridge insulation or sheathing and abut studs, and raised, rib stiffened strap stamped into center to provide slot between strap and plate for connecting wire tie, of overall size indicated below;

a. Plate and strap size; 1-1/ 4" (32 mm) wide x 6" (150 mm) long for plate, 5/8 " (16 mm) wide x 6" (150 mm) long for strap, slot clearance formed between face of plate and back of s trap at maximum rib projection, 1/3 2" (0 . 8 mm) plus diameter of wire tie.
b. Neoprene gaskets; screw attached, masonry veneer anchor manufacturer's standard, closed cell, neoprene gaskets manufactured to fit behind anchor plate and to prevent moisture from penetrating through screw holes to studs behind sheathing or insulation

D. Steel Drill Screws for Wood Studs: Self- drilling, bugle head or wafer head wood screws recommended by anchor manufacturer for fastening to wood studs, not less than No. 10 (4.8 mm) diameter x 1- 1/2 " (38 mm) length and the following corrosion protective coating:

1. Organic polymer coating with salt spray resistance to red rust of more than 800 hours per ASTM BI17

E. Subject to compliance with requirements, manufacturers offering products which may be incorporated in the work include, but are not limited to, the following:

1. Screw attached masonry veneer anchors;
   D/A 213 ; Dur-O-Wall, Inc.
   Pos - I - Tie; Heckman Building Products, Inc.
   DW-I0; Hohmann & Barnard, Inc .
   Or Equivalent

2. Organic, polymer coated, steel drill screws;
   Dril-Flex; Elco Ind., Inc.
   Traxx; ITW Buildex
   Or Equivalent

2.10 MISCELLANEOUS ANCHORS

A. Anchor Bolts: Steel bolts complying with A307, Grade A (F568, Property Class 4 . 6), with ASTM A563 (A563M) hex nuts and, where indicated, flat washers; hot dip galvanized to comply with ASTM C153, Class C, of diameter and length indicated and in the following configurations :

1. Nonheaded bolts, bent.

2.11 EMBEDDED FLASHING MATERIALS

A. Laminated Flashing: Manufacturer's standard laminated flashing of type indicated below:

1. Copper fabric laminate; copper sheet of weight indicated below, bonded with asphalt between 2 layers of glass fiber cloth.

   a. Weight; 7 oz. (2.0 kg/ sq. m)

B. Adhesive for Flashings: Of type recommended by manufacturer of flashing material for use indicated

C. Subject to compliance with requirements, manufacturers offering products which may be incorporated in the work include, but are not limited to, the following:

1. Copper fabric laminate flashing;
   Copper Fabric; Afco Products, Inc.
   Type FCC- Fabric Covered Copper; Phoenix Building Products
   Copper Fabric Flashing; Sandell Mfg Co., Inc.
   York Copper Fabric Flashing; York Mfg Inc.

2.12 MISCELLANEOUS MASONRY ACCESSORIES

A. Compressible Filler: Premolded filler strips complying with ASTM 01056, Type 2, Class A, Grade 1, compressible up to 35%, of width and thickness indicated , formulated from the following material:

1. Neoprene

B. Preformed Control Joint Gaskets: Material as indicated below, designed to fit standard sash block and to maintain lateral stability in masonry wall, size and configuration as indicated.

1. Styrene butadiene rubber compound; ASTM 02000, Designation M2AA-805

C. Bond Breaker Strips: Asphalt saturated, organic roofing felt complying with ASTM 0226, Type I, No 15 asphalt felt.

D. Weep Holes: Provide the following;

1. Round plastic tubing; medium density polyethylene, 3/ 8" (9 mm) outside diameter x 4" (100 mm) long .
2. Wicking material; material as indicated below, in length required to produce 2 " (50 mm) exposure on exterior and 18" (450 mm) in cavity between wythes;

a. Fibrous glass rope.

E. Cavity Drainage Material : I" (25 mm) thick, reticulated, nonabsorbent mesh, made from polyethylene strands and shaped to maintain drainage at weep holes without being clogged by mortar droppings.

1. Provide Mortar Net USA , Ltd, Mortar Net.

2.13 MASONRY CLEANERS

A. Job Mixed Detergent Solution: Solution of 1/2 cup (0.14 L) dry measure, tetrasodium polyphosphate and 1/2 cup (0 .14 L) dry measure, laundry detergent dissolved in one gal. (4 L) of water.

2.14 MORTAR & GROUT MIXES

B. Do not add admixtures, including pigments, air entraining agents, accelerators, retarders, water repellent agents, antifreeze compounds or other admixtures , unless otherwise indicated.

1. Do not use calcium chloride in mortar or grout .

C. Mortar for unit Masonry; Comply with ASTM C270, Proportion Specification, for job mixed mortar, and ASTM Cl142, for ready mixed mortar, of types indicated below;

1. Limit cementitious materials in mortar to Portland cement and lime.
2. For masonry below grade, in contact with earth and where indicated, use type indicated below; 1 Type S or RS.
3. For all other locations, use type indicated below;

a. Type N.

D. Pigmented Mortar: Select and proportion pigments with other ingredients to produce color required.

1. Limit pigments to the following percentages of cement content by weight:

a. For mineral oxide pigments and portland cement lime mortar, not more than 10%.

b. For carbon black pigment and portland cement lime mortar, not more than 2%.

E. Grout for unit Masonry: comply with ASTM C476. Use grout of consistency indicated or, if not otherwise indicated, of consistency, fine or coarse, a t time of placement that will completely fill spaces intended to receive grout.

1. Use fine grout in grout spaces 2" (50 mm) in horizontal dimension, unless otherwise indicated.
2. Use coarse grout in grout spaces 2" (50 mm) or more in least horizontal dimension, unless otherwise indicated.

2.15 SOURCE QUALITY CONTROL

A. Engage and pay for the services of an independent, testing agency to perform the following testing for source quality control.

B. For each type and grade of brick indicated, test units per ASTM C67, except select 5 bricks at random for each 100,000 units or fraction thereof installed.

C. For each type of concrete masonry unit indicated, test units for strength, absorption and moisture content per ASTM C140.

PART 3 - EXECUTION

3.1 EXAMINATION

A. Examine conditions, with installer present, for compliance with requirements for installation tolerances and other conditions affecting performance of unit masonry. Do not proceed with installation until unsatisfactory conditions have been corrected.

1. For the record, prepare written report, endorsed by installer, listing conditions detrimental to performance of unit masonry.

B. Examine rough in and built in construction to verify actual locations of piping connections prior to installation.

3.2 INSTALLATION, GENERAL

A. Build cavity walls and other masonry construction to the full thickness shown. Build single wythe walls to the actual thickness of the masonry units, using units of thickness indicated.

1. Provide control joints where new walls and partitions abut existing construction.

B. Build chases and recesses to accommodate items specified in this and other sections of the specifications.

1. Coordinate requirements for electrical work and provide cutouts required for conduit runs and devices.

C. Cut masonry units with motor driven saws to provide clean, sharp, unchipped edges. Cut units as required to provide continuous pattern and to fit adjoining construction. Use full units without

cutting where possible. Allow units cut with water cooled saws to dry before placing, unless wetting of units is specified. Install cut units with cut surfaces and, where possible, cut edges concealed.

D. Mix units for exposed unit masonry from several pallets or cubes as they are placed to produce uniform blend of colors and textures.

E. Wet brick prior to laying if the initial rate of absorption exceeds 30 g/30 sq . in. (g/194 sq. cm) per minute when tested per ASTM C67. Allow units to absorb the water so they are damp but not wet at the time of laying.

3.3 CONSTRUCTION TOLERANCES

A. For vertical lines and surfaces of columns, walls and arises, do not exceed 1/4" in 10 ft. (6 mm in 3 m), nor 3/8 " in 20 ft.· (10 mm in 6 m), nor 1/2 " in 40 ft. (12 mm in 12 m) or more. For external corners, expansion joints, control joints and other conspicuous lines, do not exceed 1/4 " in 20 ft . (6 mm in 6 m), nor 1/2" in 40 ft. (12 mm in 12 m) or more. For vertical alignment of head joints, do not exceed ±1/ 4 " in 10 ft. (6 mm in 3 m), nor 1/2" (12 mm) maximum.

B. For bed joints and lines of exposed lintels, sills, parapets, horizontal grooves and other conspicuous lines, do not exceed 1/ 4 " in 20 ft. (6 mm in 6 m), nor 1/ 2" in 40 ft. (12 mm in 12 m) or more. For top surface of bearing walls, do not exceed 1/8" in 10 ft. (3 mm in 3 m), nor 1/16" (1.5 mm) within width of a single unit.

C. For position shown in plan and related portion of columns, walls and partitions, do not exceed 1/2" in 20 ft. (12 mm in 6 m), nor 3/ 4" in 40 ft. (19 mm in 12 m) or more.

D. For columns and thickness of walls, from dimension shown, do not exceed - 1/ 4" (6 mm) nor +1/ 2" (12 mm).

E. Do not vary from bed joint thickness indicated by more than ±1/ 8" (3 mm), with a maximum thickness limited to 1/ 2" (12 mm). Do not vary bed joint thickness from bed joint thickness of adjacent course by more than 1/8" (3 mm). Do not vary from head joint thickness indicated by more than ±1/ 8" (3 mm). Do not vary head joint thickness from adjacent head joint thickness by more than 1/ 8" (3 mm). Do not vary from collar joint thickness indicated by more than -1/4” (6 mm) or +3/8" (10 mm).

3.4 LAYING MASONRY WALLS

A. Layout walls in advance for accurate spacing of surface bond patterns with uniform joint widths and for accurate locating of openings, movement type joints, returns and offsets. Avoid the use of less than half size units at corners, jambs and where possible at other locations.

B. Lay walls to comply with specified construction tolerances, with courses accurately spaced and coordinated with other construction.

C. Lay face brick in the following bond pattern; do not use units with less than nominal 4" (100 mm) horizontal face dimensions at corners or jambs.

.1 One half running bond with vertical joint in each course centered on units in courses above and below

.

D. When stopping and resuming work, in each course rack back 1/2 unit length for one half running bond or 1/3 unit length for one third running bond; do not tooth. Clean exposed surfaces of set masonry, wet clay masonry units lightly, if required, and remove loose masonry units and mortar prior to laying fresh masonry.

E. As construction progresses, build in items specified under this and other sections of the specifications. Fill in solidly with masonry around built in items.

F. Fill space between hollow metal frames and masonry solidly with mortar, unless otherwise indicated

.

3.5 MORTAR BEDDING & JOINTING

A. Lay hollow concrete masonry units as follows:

1. With full mortar coverage on horizontal and vertical face shells
2. For starting course, spread out full mortar bed including areas under cells .
3. Maintain joint widths indicated except for minor variations required to maintain bond alignment. If not indicated, lay walls with 3/8" (10 mm) joints.

B. Lay brick as follows:

1. Lay vertical cell units with full head joints, unless otherwise indicated. Provide bed joints with full mortar coverage on face shells and webs.
2. Maintain joint widths indicated, except for minor variations required to maintain bond alignment. If not indicated, lay walls with 1/4 " to 3/8" (6 to 10 mm) joints.
3. Tool exposed joints slightly concave when thumb print hard using a jointer larger than joint thickness, unless otherwise indicated.

3.6 CAVITIES

A. Keep cavities clean of mortar droppings and other materials during construction. Strike joints facing cavities flush.

1. Use wood strips temporarily placed in cavity to collect mortar droppings. As work progresses, remove strips, clean off mortar droppings and replace in cavity.

3.07 HORIZONTAL JOINT REINFORCEMENT

A. Provide continuous, horizontal joint reinforcement as indicated . Install entire length of longitudinal side rods in mortar with a minimum cover of 5/ 8" (16 mm) on exterior side of walls, 1/ 2" (13 mm) elsewhere. Lap reinforcing a minimum of 6" (150 mm).

B. Cut or interrupt joint reinforcement at control and expansion joints, unless otherwise indicated.

1. Space reinforcement not more than 8" (203 mm) o.c.
in foundation walls.

C. Provide continuity at corners and wall intersections by using prefabricated Land T sections. Cut and bend reinforcement units as directed by manufacturer for continuity at returns, offsets and other special conditions.

3.8 ANCHORING MASONRY TO EXISTING CONSTRUCTION

A. Anchor masonry to existing construction where masonry abuts or faces such existing work to comply with the following:

1. Provide an open space not less than 1" (25 mm) in width between masonry and existing construction. Keep open space free of mortar or other rigid materials.
2. Anchor masonry to existing construction with rigid anchors embedded in masonry joints and attached to existing construction.
3. Space anchors as indicated, but not more than 24" (610 mm) o.c. vertically and 36" (915 mm) o.c. horizontally.

3.9 ANCHORING MASONRY VENEERS

A. Anchor masonry veneer to studs with masonry veneer anchors to comply with the following requirements:

1. Fasten each anchor section through sheathing to studs with 2 metal fasteners of type indicated.
2. Embed tie section in masonry joints. Provide air space between back of masonry veneer and face of sheathing.
3. Locate anchor section relative to course where tie section is embedded to allow maximum vertical differential movement of tie up and down.
4. Space anchors as indicated, but not more than 16" (406 mm) o.c. vertically and 18" (457 mm) o.c. horizontally. Install additional anchors within 12" (305 mm) of openings and at intervals around perimeter not exceeding 8 " (203 mm).

3.10 CONTROL & EXPANSION JOINTS

A. Install control and expansion joints in unit masonry where indicated. Build in related items as the masonry progresses . Do not form a continuous span through movement joints unless provisions are made to prevent in plane restraint of wall or partition movement.

B. Form expansion joints in brick as follows:

1. Build in joint fillers where indicated.
2. Form open joint of width indicated but not less than 3/8" (10 mm) for installation of sealant and backer rod specified in joint sealers section of Division 7. Maintain joint free and clear of mortar.

C. Build in horizontal, pressure relieving joints where indicated; construct joints by either leaving an air space or inserting a compressible joint filler of width required for installing sealant and backer rod specified in joint sealers sect ion of Division 7.

1. Locate horizontal, pressure relieving joints beneath shelf angles supporting masonry veneer and attached to structure behind masonry veneer.

3.11 LINTELS

.

A. Install steel lintels where indicated.

B. Provide minimum bearing of 8 " (200 mm) at each jamb, unless otherwise indicated.

3.12 FLASHING & WEEP HOLES

A. Install embedded flashing and weep holes in masonry at shelf angles, lintels, ledges, other obstructions to the downward flow of water in the wall and where indicated.

B. Prepare masonry surfaces so that they are smooth and free from projections that could puncture flashing. Place through wall flashing on sloping bed of mortar and cover with mortar. Seal penetrations in flashing with adhesive, sealant or tape as recommended by flashing manufacturer before covering with mortar.

C. Install flashing as follows:

1. At masonry veneer walls, extend flashing from exterior face of veneer, through the veneer, up face of sheathing at least 8 " (200 mm) and behind air infiltration barrier/building paper.
2. At lintels and shelf angles, extend flashing a minimum of 4 " (100 mm) into masonry at each end. At heads and sills, extend flashing 4 " (100 mm) at ends and turn up not less than 2 " (50 mm) to form a pan.

D. Install weep holes in the head joints in exterior wythes of the first course of masonry immediately above embedded flashings and as follows:

1. Form weep holes with product specified in Part 2 of this section.
2. Space weep holes 24" (600 mm) o.c.
3. Place cavity drainage material immediately above flashing in cavities.

E. Trim wicking material used in weep holes flush with outside face of wall after mortar has set.

F. Install reglets and nailers for flashing and other related construction where shown to be built into masonry.

3.13 FIELD QUALITY CONTROL

A. Engage and pay for the services of an independent, testing agency to perform the following testing for field quality control.

B. Tests and evaluations listed in this a r ticle shall be performed during construction for each 5000 sq. ft. (460 sq. m) of wall area or portion thereof.

C. Mortar properties shall be t est ed per property specification of ASTM C270.

D. Mortar composition and properties shall be evaluated per ASTM C780.

E. Grout shall be sampled and tested for compressive strength per ASTM CI019.

F. In the absence of other indications of noncompliance with requirements, masonry will be considered satisfactory if results from construction quality control tests comply with minimum requirements indicated.

3 .14 REPAIR, POINTING & CLEANING

A. Remove and replace masonry units that are loose, chipped, broken, stained or otherwise damaged, or if units do not match adjoining units. Install new units to match adjoining units and install in fresh mortar or grout, pointed to eliminate evidence of replacement. .

B. During the tooling of joints, enlarge voids or holes, except weep holes, and completely fill with mortar. Point up all joint s including corners, openings and adjacent construction to provide a neat, uniform appearance. Prepare joints for application of sealants.

C. Clean unit masonry as work progresses by dry brushing to remove mortar fins and smears prior to tooling joints

.

D. After mortar is thoroughly set and cured, clean exposed masonry as follows:

1. Remove large mortar particles by hand with wooden paddles and nonmetallic scrape hoes or chisels.
2. Clean brick by means of bucket and brush hand cleaning method described in BIA Technical Note No. 20 Revised using the following masonry cleaner:

    a. Job mixed detergent solution.

E. Provide final protection and maintain conditions that ensure unit masonry work is without damage and deterioration at time of substantial completion.

3.15 MASONRY WASTE DISPOSAL

A. Remove excess masonry and other masonry waste, and legally dispose of off Owner's property.

END OF SECTION 042200 – UNIT MASONRY

SECTION 321000 - EARTH MOVING

PART 1 - GENERAL

1.1 RELATED DOCUMENTS

A. Drawings and general provisions of the Contract, including General and Supplementary Conditions and Division 01 Specification Sections, apply to this Section.

1.2 SUMMARY

A. Section Includes:

1. Preparing subgrades for walks and pavements.
2. Excavating and backfilling trenches for utilities.

B. Related Sections:

1. Section 01322 "Photographic Documentation" for recording pre-excavation and earth moving progress.
2. Section 311000 "Site Clearing" for site stripping, grubbing, stripping and stockpiling topsoil, and removal of above- and below-grade improvements and utilities.

1.3 DEFINITIONS

A. Backfill: Soil material or controlled low-strength material used to fill and excavation.

1. Initial Backfill: Backfill placed beside and over pipe in a trench, including haunches to support sides of pipe.
2. Final Backfill: Backfill placed over initial backfill to fill a trench.

B. Base Course: Aggregate layer placed between the sub-base course and hot-mix asphalt paving.

C. Bedding Course: Aggregate layer placed over the excavated subgrade in a trench before laying pipe.

D. Borrow Soil: Satisfactory soil imported from off-site for use as fill or backfill.

E. Drainage Course: Aggregate layer supporting the slab-on-grade that also minimizes upward capillary flow of pore water.

F. Excavation: Removal of material encountered above subgrade elevations and to lines and dimensions indicated.

G. Fill: Soil materials used to raise existing grades.

H. Structures: Buildings, footings, foundations, retaining walls, slabs, tanks, curbs, mechanical and electrical appurtenances, or other man-made stationary features constructed above or below the ground surface.

I. Sub-base Course: Aggregate layer placed between the subgrade and base course for hot-mix asphalt pavement, or aggregate layer placed between the subgrade and a cement concrete pavement or a cement concrete or hot-mix asphalt walk.

J. Subgrade: Uppermost surface of an excavation or the top surface of a fill or backfill immediately below sub base, drainage fill, drainage course, or topsoil materials.

K. Utilities: On-site underground pipes, conduits, ducts, and cables, as well as underground services within buildings.

1.4 ACTION SUBMITTALS

A. Product Data: For each type of the following manufactured products required:

1. Warning tapes.
2. Fill and Topsoil with certifications and testing reports from a qualified testing agency that state that the fill and topsoil acquired from a clean, non-contaminated source.

B. Samples for Verification: For the following products, in sizes indicated below:

1. Warning Tape: 12 inches (300 mm) long; of each color.

1.5 INFORMATIONAL SUBMITTALS

A. Qualification Data: For qualified testing agency.

B. Material Test Reports: For each on-site and borrow soil material proposed for fill and backfill as follows:

1. Classification according to ASTM D 2487.
2. Laboratory compaction curve according to ASTM D 698.

C. Pre-excavation Photographs or Video: Show existing conditions of adjoining construction and site improvements, including finish surfaces, that might be misconstrued as damage caused by earth moving operations. Submit before earth moving begins.

1.6 PROJECT CONDITIONS

A. Traffic: Minimize interference with adjoining roads, streets, walks, and other adjacent occupied or used facilities during earth moving operations.

1. Do not close or obstruct streets, walks, or other adjacent occupied or used facilities without permission from Owner and authorities having jurisdiction.
2. Provide alternate routes around closed or obstructed traffic ways. Temporary bridges to be provided over sidewalks if necessary to allow continuous usage by college staff and students.

B. Utility Locator Service: Notify utility locator service and college for area where Project is located before beginning earth moving operations.

C. Do not commence earth moving operations until temporary erosion- and sedimentation-control measures, specified in Section 311000 "Site Clearing," are in place.

D. Do not commence earth moving operations until plant-protection measures are in place.

E. The following practices are prohibited within protection zones:

1 Storage of construction materials, debris, or excavated material.
2 Parking vehicles or equipment.
3 Foot traffic.

4 Erection of sheds or structures.
5 Impoundment of water.
6 Excavation or other digging unless otherwise indicated.
7 Attachment of signs to or wrapping materials around trees or plants unless otherwise indicated.

F. Do not direct vehicle or equipment exhaust towards protection zones.

G. Prohibit heat sources, flames, ignition sources, and smoking within or near protection zones.

PART 2 - PRODUCTS

2.1 SOIL MATERIALS

A. General: Provide borrow soil materials when sufficient satisfactory soil materials are not available from excavations.

B. Satisfactory Soils: Soil Classification Groups GW, GP, GM, SW, SP, and SM according to ASTM D 2487, or a combination of these groups; free of rock or gravel larger than 3 inches (75 mm) in any dimension, debris, waste, frozen materials, vegetation, and other deleterious matter.

C. Unsatisfactory Soils: Soil Classification Groups GC, SC, CL, ML, OL, CH, MH, OH, and PT according to ASTM D 2487, or a combination of these groups.

1. Unsatisfactory soils also include satisfactory soils not maintained within 2 percent of optimum moisture content at time of compaction.

D. Sub-base Material: Naturally or artificially graded mixture of natural or crushed gravel, crushed stone, and natural or crushed sand; ASTM D 2940; with at least 90 percent passing a 1-1/2-inch (37.5-mm) sieve and not more than 12 percent passing a No. 200 (0.075-mm) sieve.

E. Base Course: Naturally or artificially graded mixture of natural or crushed gravel, crushed stone, and natural or crushed sand; ASTM D 2940; with at least 95 percent passing a 1-1/2-inch (37.5-mm) sieve and not more than 8 percent passing a No. 200 (0.075-mm) sieve.

F. Engineered Fill: Naturally or artificially graded mixture of natural or crushed gravel, crushed stone, and natural or crushed sand; ASTM D 2940; with at least 90 percent passing a 1-1/2-inch (37.5-mm) sieve and not more than 12 percent passing a No. 200 (0.075-mm) sieve.

G. Bedding Course: Naturally or artificially graded mixture of natural or crushed gravel, crushed stone, and natural or crushed sand; ASTM D 2940; except with 100 percent passing a 1-inch (25-mm) sieve and not more than 8 percent passing a No. 200 (0.075-mm) sieve.

H. Drainage Course: Narrowly graded mixture of crushed stone, or crushed or uncrushed gravel; ASTM D 448; coarse-aggregate grading Size 57; with 100percent passing a 1-1/2-inch (37.5-mm) sieve and 0 to 5 percent passing a No. 8 (2.36-mm) sieve.

I. Filter Material: Narrowly graded mixture of natural or crushed gravel, or crushed stone and natural sand; ASTM D 448; coarse-aggregate grading Size 67; with 100 percent passing a 1-inch (25-mm) sieve and 0 to 5 percent passing a No. 4 (4.75-mm) sieve.

J. Sand: ASTM C 33; fine aggregate.

K. Impervious Fill: Clayey gravel and sand mixture capable of compacting to a dense state.

2.2 ACCESSORIES

A. Detectable Warning Tape: Acid- and alkali-resistant, polyethylene film warning tape manufactured for marking and identifying underground utilities, a minimum of 6 inches (150 mm) wide and 4 mils (0.1 mm) thick, continuously inscribed with a description of the utility, with metallic core encased in a protective jacket for corrosion protection, detectable by metal detector when tape is buried up to 30 inches (750 mm) deep; colored as follows:

1. Yellow: Gas, oil, steam, and dangerous materials.

PART 3 - EXECUTION

3.1 PREPARATION

A. Protect structures, utilities, sidewalks, pavements, and other facilities from damage caused by settlement, lateral movement, undermining, washout, and other hazards created by earth moving operations.

B. Protect and maintain erosion and sedimentation controls during earth moving operations.

C. Protect subgrades and foundation soils from freezing temperatures and frost. Remove temporary protection before placing subsequent materials.

3.2 DEWATERING

A. Prevent surface water and ground water from entering excavations, from ponding on prepared subgrades, and from flooding Project site and surrounding area.

B. Protect subgrades from softening, undermining, washout, and damage by rain or water accumulation.

1. Reroute surface water runoff away from excavated areas. Do not allow water to accumulate in excavations. Do not use excavated trenches as temporary drainage ditches.

3.3 EXPLOSIVES

A. Explosives: Do not use explosives.

3.4 EXCAVATION, GENERAL

A. Unclassified Excavation: Excavate to subgrade elevations regardless of the character of surface and subsurface conditions encountered. Unclassified excavated materials may include rock, soil materials, and obstructions. No changes in the Contract Sum or the Contract Time will be authorized for rock excavation or removal of obstructions.

1. If excavated materials intended for fill and backfill include unsatisfactory soil materials and rock, replace with satisfactory soil materials.
2. Remove rock to lines and grades indicated to permit installation of permanent construction without exceeding the following dimensions:
   a. 24 inches (600 mm) outside of concrete forms other than at footings.
   b. 6 inches (150 mm) beneath pipe in trenches, and the greater of 24 inches (600 mm) wider than pipe or 42 inches (1065 mm) wide.

B. Excavations at Edges of Tree- and Plant-Protection Zones:

1. Excavate by hand to indicated lines, cross sections, elevations, and subgrades. Use narrow-tine spading forks to comb soil and expose roots. Do not break, tear, or chop exposed roots. Do not use mechanical equipment that rips, tears, or pulls roots.

3.5 EXCAVATION FOR WALKS AND PAVEMENTS

A. Excavate surfaces under walks and pavements to indicated lines, cross sections, elevations, and subgrades.

3.6 EXCAVATION FOR UTILITY TRENCHES

A. Excavate trenches to indicated gradients, lines, depths, and elevations.

1. Beyond building perimeter, excavate trenches to allow installation of top of pipe below frost line.

B. Excavate trenches to uniform widths to provide the following clearance on each side of pipe or conduit. Excavate trench walls vertically from trench bottom to 12 inches (300 mm) higher than top of pipe or conduit unless otherwise indicated.

1. Clearance: 12 inches (300 mm) each side of pipe or conduit.

C. Trench Bottoms: Excavate and shape trench bottoms to provide uniform bearing and support of pipes and conduit. Shape subgrade to provide continuous support for bells, joints, and barrels of pipes and for joints, fittings, and bodies of conduits. Remove projecting stones and sharp objects along trench subgrade.

A. For pipes and conduit less than 6 inches (150 mm) in nominal diameter, hand-excavate trench bottoms and support pipe and conduit on an undisturbed subgrade.

B. For pipes and conduit 6 inches (150 mm) or larger in nominal diameter, shape bottom of trench to support bottom 90 degrees of pipe or conduit circumference. Fill depressions with tamped sand backfill.

C. For flat-bottomed, multiple-duct conduit units, hand-excavate trench bottoms and support conduit on an undisturbed subgrade.

D. Excavate trenches 6 inches (150 mm) deeper than elevation required in rock or other unyielding bearing material to allow for bedding course.

D. Trench Bottoms: Excavate trenches 4 inches (100 mm) deeper than bottom of pipe and conduit elevations to allow for bedding course. Hand-excavate deeper for bells of pipe.

1. Excavate trenches 6 inches (150 mm) deeper than elevation required in rock or other unyielding bearing material to allow for bedding course.

E. Trenches in Tree- and Plant-Protection Zones:

1. Hand-excavate to indicated lines, cross sections, elevations, and subgrades. Use narrow-tine spading forks to comb soil and expose roots. Do not break, tear, or chop exposed roots. Do not use mechanical equipment that rips, tears, or pulls roots.

2. Do not cut main lateral roots or taproots.

3.7 SUBGRADE INSPECTION

A. Notify Engineer when excavations have reached required subgrade.

B. If Engineer determines that unsatisfactory soil is present, continue excavation and replace with compacted backfill or fill material as directed.

C. Proof-roll subgrade below manholes to identify soft pockets and areas of excess yielding. Do not proof-roll wet or saturated subgrades.

1. Completely proof-roll subgrade in one direction, repeating proof-rolling in direction perpendicular to first direction.
2. Excavate soft spots, unsatisfactory soils, and areas of excessive pumping or rutting, as determined by Architect, and replace with compacted backfill or fill as directed.

D. Authorized additional excavation and replacement material will be paid for according to Contract provisions for changes in the Work.

E. Reconstruct subgrades damaged by freezing temperatures, frost, rain, accumulated water, or construction activities, as directed by Engineer, without additional compensation.

3.8 STORAGE OF SOIL MATERIALS

A. Stockpile borrow soil materials and excavated satisfactory soil materials without intermixing. Place, grade, and shape stockpiles to drain surface water. Cover to prevent windblown dust.

1. Stockpile soil materials away from edge of excavations. Do not store within drip line of remaining trees.

2. Carlton Avenue lot shall be used for storage. Coordinate with owner on location and access.

3.9 BACKFILL

A. Place and compact backfill in excavations promptly, but not before completing the following:

1 Construction below finish grade including, where applicable, sub drainage, dampproofing, waterproofing, and perimeter insulation.
2 Surveying locations of underground utilities for Record Documents.
3 Testing and inspecting underground utilities.
4 Removing concrete formwork.
5 Removing trash and debris.
6 Removing temporary shoring and bracing, and sheeting.
7 Installing permanent or temporary horizontal bracing on horizontally supported walls.

B. Place backfill on subgrades free of mud, frost, snow, or ice.

3.10 UTILITY TRENCH BACKFILL

A. Place backfill on subgrades free of mud, frost, snow, or ice.

B. Place and compact bedding course on trench bottoms and where indicated. Shape bedding course to provide continuous support for bells, joints, and barrels of pipes and for joints, fittings, and bodies of conduits.

C. Trenches under Roadways: Provide 4-inch- (100-mm-) thick, concrete-base slab support for

piping or conduit less than 30 inches (750 mm) below surface of roadways. After installing and testing, completely encase piping or conduit in a minimum of 4 inches (100 mm) of concrete before backfilling or placing roadway sub-base course. Concrete is specified in Section 033000 "Cast-in-Place Concrete."

D. Backfill voids with satisfactory soil while removing shoring and bracing.

E. Place and compact initial backfill of sub-base material, free of particles larger than 1 inch (25 mm) in any dimension, to a height of 12 inches (300mm) over the pipe or conduit.

1. Carefully compact initial backfill under pipe haunches and compact evenly up on both sides and along the full length of piping or conduit to avoid damage or displacement of piping or conduit. Coordinate backfilling with utilities testing.

F. Place and compact final backfill of satisfactory soil to final subgrade elevation.

G. Install warning tape directly above utilities, 12 inches (300 mm) below finished grade, except 6 inches (150 mm) below subgrade under pavements and slabs.

3.11 SOIL FILL

A. Plow, scarify, bench, or break up sloped surfaces steeper than 1 vertical to 4 horizontal so fill material will bond with existing material.

B. Place and compact fill material in layers to required elevations as follows:

1. Under grass and planted areas, use satisfactory soil material.
2. Under walks and pavements, use satisfactory soil material.

C. Place soil fill on subgrades free of mud, frost, snow, or ice.

3.12 SOIL MOISTURE CONTROL

A. Uniformly moisten or aerate subgrade and each subsequent fill or backfill soil layer before compaction to within 2 percent of optimum moisture content.

1 Do not place backfill or fill soil material on surfaces that are muddy, frozen, or contain frost or ice.
2 Remove and replace, or scarify and air dry, otherwise satisfactory soil material that exceeds optimum moisture content by 2 percent and is too wet to compact to specified dry unit weight.

3.13 COMPACTION OF SOIL BACKFILLS AND FILLS

A. Place backfill and fill soil materials in layers not more than 8 inches (200 mm) in loose depth for material compacted by heavy compaction equipment, and not more than 4 inches (100 mm) in loose depth for material compacted by hand-operated tampers.

B. Place backfill and fill soil materials evenly on all sides of structures to required elevations, and uniformly along the full length of each structure.

C. Compact soil materials to not less than the following percentages of maximum dry unit weight according to ASTM D 698:

1 Under structures and pavements, scarify and re-compact top 12 inches(300 mm) of existing

subgrade and each layer of backfill or fill soil material at 95 percent.

2 Under walkways, scarify and re-compact top 6 inches (150 mm) below subgrade and compact each layer of backfill or fill soil material at92 percent.

3 Under turf or unpaved areas, scarify and re-compact top 6 inches (150mm) below subgrade and compact each layer of backfill or fill soil material at 85 percent.

4 For utility trenches, compact each layer of initial and final backfill soil material at 85 percent.

3.14 GRADING

A. General: Uniformly grade areas to a smooth surface, free of irregular surface changes. Comply with compaction requirements and grade to cross sections, lines, and elevations indicated.

1 Provide a smooth transition between adjacent existing grades and new grades.

2 Cut out soft spots, fill low spots, and trim high spots to comply with required surface tolerances.

B. Site Rough Grading: Slope grades to direct water away from buildings and to prevent ponding. Finish subgrades to required elevations within the following tolerances:

1 Turf or Unpaved Areas: Plus or minus 1 inch (25 mm).

2 Walks: Plus or minus 1 inch (25 mm).

3 Pavements: Plus or minus 1/2 inch (13 mm).

3.15 SUBBASE AND BASE COURSES UNDER PAVEMENTS AND WALKS

A. Place sub-base course and base course on subgrades free of mud, frost, snow,or ice.

B. On prepared subgrade, place sub-base course and base course under pavements and walks as follows:

1 Shape sub-base course and base course to required crown elevations and cross-slope grades.

2 Place sub-base course and base course 6 inches (150 mm) or less in compacted thickness in a single layer.

3 Place sub-base course and base course that exceeds 6 inches (150 mm) in compacted thickness in layers of equal thickness, with no compacted layer more than 6 inches (150 mm) thick or less than 3inches (75 mm) thick.

4 Compact sub-base course and base course at optimum moisture content to required grades, lines, cross sections, and thickness to not less than 95 percent of maximum dry unit weight according to ASTM D 698.

3.16 FIELD QUALITY CONTROL

A. Testing Agency: Contractor will engage a qualified geotechnical engineering testing agency to perform tests and inspections.

1 Determine prior to placement of fill that site has been prepared in compliance with requirements.

2 Determine that fill material and maximum lift thickness comply with requirements.

3 Determine, at the required frequency, that in-place density of compacted fill complies with requirements.

B. Allow testing agency to inspect and test subgrades and each fill or backfill layer. Proceed with subsequent earth moving only after test results for previously completed work comply with requirements.

C. Testing agency will test compaction of soils in place according to ASTM D 1556, ASTM D 2167, ASTM D 2922, and ASTM D 2937, as applicable. Tests will be performed at the following locations and frequencies:

1 Paved and Building Slab Areas: At subgrade and at each compacted fill and backfill layer, at least one test for every 2000 sq. ft.(186 sq. m) or less of paved area or building slab, but in no case fewer than three tests.
2 Trench Backfill: At each compacted initial and final backfill layer, at least one test for every 150 feet (46 m) or less of trench length, but no fewer than two tests.

D. When testing agency reports that subgrades, fills, or backfills have not achieved degree of compaction specified, scarify and moisten or aerate, or remove and replace soil materials to depth required; re-compact and retest until specified compaction is obtained.

3.17 PROTECTION

A. Protecting Graded Areas: Protect newly graded areas from traffic, freezing, and erosion. Keep free of trash and debris.

B. Repair and reestablish grades to specified tolerances where completed or partially completed surfaces become eroded, rutted, settled, or where they lose compaction due to subsequent construction operations or weather conditions.

1. Scarify or remove and replace soil material to depth as directed by Architect; reshape and re-compact.

C. Where settling occurs before Project correction period elapses, remove finished surfacing, backfill with additional soil material, compact, and re-construct surfacing.
1. Restore appearance, quality, and condition of finished surfacing to match adjacent work, and eliminate evidence of restoration to greatest extent possible.

3.18 DISPOSAL OF SURPLUS AND WASTE MATERIALS

A. Remove surplus satisfactory soil and waste materials, including unsatisfactory soil, trash, and debris, and legally dispose of them off Owner's property.

END OF SECTION 312000

SECTION 321416 – PAVERS

PART 1 - GENERAL

1.1 RELATED DOCUMENTS

1. Drawings and general provisions of this Contract including General

1.2 DESCRIPTION OF WORK

A. General: Comply with all applicable contract documents.

B. Scope of Work: Includes but is not limited to the following:
   1. Excavation
   2. Preparation of Subgrade
   3. Pavers set in sand setting bed.
   4. Ungrounded, mortarless brick pavers on sand setting bed.
   5. Layout and Installation of Unit Pavers

1.3 QUALITY ASSURANCE.

A. Contractor shall conform to the standards set by the American Society for Testing Materials (ASTM) latest issue, as set forth in these specifications.

B. Installation shall be by a contractor and crew with at least five (5) years of experience in placing clay brick unit, stone unit, and custom stone accent pavers on projects of similar nature and dollar cost.

C. Source Limitations: Obtain each type of unit paver, joint material, and setting material from one source with resources to provide materials, and products of consistent quality in appearance, and physical properties.

D. Perform paving work in compliance with NJSCC Safety Policies and Requirements, local, state, and federal governing authorities having jurisdiction including 29 CFR 1926 Subpart O- Motor Vehicles, Mechanized Equipment, and Marine Operations.

E. All materials used shall be asbestos free. Asbestos free means that the material contains no more than 1% asbestos by weight.

1.4 SUBMITTALS

A. Shop Drawings shall be as specified.

B. Submit qualification data for installer specified in “Quality Assurance” to demonstrate their capabilities and experience. Include list of completed projects with project names, addresses, names of Architects and Owners.

C. Shop drawings, manufacturer's data, or cut sheets shall be provided for the following:
   1. Unit Pavers

D. Samples Required:
   1. Submit full size samples of each paver type to indicate shape, color, texture grain and finish.

E. Materials Certificates:
   1. Provide three (3) copies of the materials certificates, signed by the material producer and the Contractor, certifying that each material item meets or exceeds specified requirements.

1.5 PRODUCT HANDLING

A. Protection: Use all means necessary to protect the material of this section before, during and after installation and to protect the installed work and materials of all other trades.

B. Replacement: In the event of damage, immediately make all repairs and replacements necessary to the satisfaction of the OWNERS Representative and LANDSCAPE ARCHITECT, and at no additional cost to the OWNER.

C. Store pavers on elevated platforms in a dry location. If units are not stored in an enclosed location, cover tops and sides of stacks with waterproof sheeting, securely tied.

D. Store aggregates where grading and other required characteristics can be maintained and contamination avoided.

1.6 COORDINATION

A. The Contractor shall provide all necessary labor, equipment, materials and incidentals necessary to construct the Pavers, and edges shown on the drawings and specified herein.

1.7 JOB CONDITIONS

A. Surface Conditions: Prior to all work of this section, carefully inspect the installed work of all other trades and verify that all such work is completed to the point where this installation may properly commence.

B. Do not use frozen materials or materials mixed or coated with ice or frost. Do not build on frozen subgrade or setting beds. Remove and replace unit paver work damaged by frost or freezing.

C. Discrepancies:
   1. In the event of discrepancy, immediately notify the OWNERS Representative and the LANDSCAPE ARCHITECT.
   2. Do not proceed with installation in areas of discrepancy until all such discrepancies have been fully resolved.

D. Grading: Do any necessary grading in addition to that performed in accordance with applicable section to bring subgrades after final compaction to the required grades and profiles required for pavers.

E. Compaction of Subgrades: Compact the subgrade of all areas to receive pavers with compacting equipment or by other means required to achieve densities indicated so as to insure against settlement of the superimposed work.

F. Checking Subgrades: Maintain all subgrades in satisfactory condition, protected against traffic and properly drained until the surface improvement are placed.

G. Cold-Weather Protection: Do not use frozen materials or materials mixed or coated with ice or frost. Do not build on frozen subgrade or setting beds. Remove and replace unit paver work damaged by frost or freezing.

PART 2 - PRODUCTS

2.1 BRICK PAVERS

A. Paver: As specified on the contract drawings detail 5 sheet L102 or equivalent.

B. Pavers shall be laid in the patterns shown on the Contract Drawings. Begin paving pattern at edge; use only full units except where pavement changes. Width of path may vary slightly in order to use full units, but shall not be less than the dimensions depicted in the contract drawings.

C. Setting Bed: Setting Bed shall be as depicted in Contract Drawings. Bed includes sand swept joints ASTM C33, 1” sand setting bed ASTM C33, and 4” Compacted DGA..

D. Setting Bed shall be as depicted in Detail E17, Sheet L102 of the Contract Drawings. Bed includes 1” sand setting bed ASTM C33, 4” concrete base (4,500psi, Class B), Welded Wire Mesh, Geotextile filter fabric, and 4” Compacted DGA.

2.2 AGGREGATES FOR UNGROUTED, MORTARLESS INSTALLATION

A. Sand for leveling course shall be fine, sharp non-plastic aggregate complying with ASTM C33.

B. Sand for joints used in dry pack mixture shall be ASTM C144 except use graded aggregate with 100 percent passing the No. 8 sieve and 95 percent, the No. 16 sieve.

PART 3 - EXECUTION

3.1 GENERAL

A. Inspection: Examine the areas and conditions under which the pavers are to be installed. Notify the OWNERS Representative and LANDSCAPE ARCHITECT, in writing, of conditions detrimental to the proper and timely completion of work. Do not proceed with the work until unsatisfactory conditions have been corrected in an acceptable manner.

B. Subgrade Preparation: Check for correct elevations and position all structures located within area to be paved and make any necessary adjustments.

C. Do not use unit pavers with chips, cracks, voids, discolorations, and other defects that might be visible in finished work.

D. Mix pavers from several pallets or cubes, as they are placed, to produce uniform blend of colors and textures.

E. Cut unit pavers with motor-driven masonry saw equipment to provide clean, sharp, unchipped edges. Cut units to provide pattern indicated and to fit adjoining work neatly. Use full units without cutting where possible. Hammer cutting is not acceptable.

F. Joint Pattern: As indicated on plans.

G. Tolerances: Do not exceed 1/32-inch (0.8-mm) unit-to-unit offset from flush (lippage) nor 1/8 inch in 10 feet (3 mm in 3 m) from level, or indicated slope, for finished surface of paving.

3.2 MORTARLESS INSTALLATION

A. Excavate and install aluminum walkway edging and 4” of ¾” aggregate DGA compacted to 95% in areas where paver walkways are shown on the contract drawings.

B. Place sand leveling course and screed to a thickness of 1 inch to 1-1/4 inch, taking care that moisture content remains constant.

C. Set pavers hand tight being careful not to disturb leveling base.

D. Vibrate pavers into leveling course with a low amplitude plate vibration capable of a 3,500 to 5,000 pound compaction force. Perform at least 3 passes across paving with vibrator.

E. Spread dry sand and fill joints immediately after vibrating pavers into leveling course. Brush and vibrate sand joints until completely filled, then remove surplus sand.

F. Repeat joint filling process 30 days later.

3.3 PAVERS

A. All excess excavated material shall become property of the CONTRACTOR and shall be removed and disposed offsite at no additional cost to the OWNER.

B. Thoroughly compact subgrade to 95% modified proctor density.

C. Setting Pavers: Carefully place the pavers by hand, best side up in straight course, with hand tight joints and uniform top surfaces, keeping full alignment according to the patterns shown on the contract drawings. Cutting, where necessary shall be accomplished by either a double bladed splitter or masonry saw. Avoid creation of small pieces by dry fitting and adjusting courses. All adjustments subject to review and approval by the Owner’s Landscape Architect.

D. Newly laid pavers must be protected at all times by panels of plywood on which the paver stands. These panels can be advanced as work progresses. However, the plywood protection must be kept in areas that will be subjected to continued movement of materials and equipment. These precautions must be taken in order to avoid depressions and maintain paver alignment.

E. Joint Treatment: Hand tight joints shall read from 0" to maximum 3/16".

F. Protection: Protect pavements installed under this section until acceptance of work. Repair and/or replace any damaged work at no cost to the Owner, and to the satisfaction of the LANDSCAPE ARCHITECT.

3.4 REPAIRING, POINTING, AND CLEANING

A. Remove and replace unit pavers that are loose, chipped, broken, stained, or otherwise damaged or that do not match adjoining units. Provide new units to match adjoining units and install in same manner as original units, with same joint treatment and with no evidence of replacement.

END OF SECTION 321416

SECTION 32 92 00 - LAWNS AND GRASSES

PART 1 - GENERAL

1.1 RELATED DOCUMENTS

A. Drawings and general provisions of the Contract, including General and Supplementary Conditions and Division 1 Specification Sections, apply to this Section.

B. If not otherwised specified herein, Lawns and Grasses shall be performed in accordance with Sections 804, 806, and 809 of the New Jersey Department of Transportation Standard Specifications for Road and Bridge Construction, latest edition.

1.2 SUMMARY

A. This Section includes the following:

1. Preparation of Subsoil
2. Placing Topsoil.
3. Fertilizing
4. Sod Installation
5. Seeding
6. Straw Mulch.
7. Maintenance

B. All areas disturbed and all areas within the property boundaries are to be restored with topsoil, fertilizer and seed if no other material is defined. The Contractor shall topsoil, fertilize and seed and straw mulch grass areas disturbed during construction.

C. All areas labeled as SOD LAWN shall be installed with Sod.

1.3 DEFINITIONS

A. Finish Grade: Elevation of finished surface of planting soil.

B. Manufactured Soil: Soil produced off-site by homogeneously blending mineral soils or sand with stabilized organic soil amendments to produce topsoil or planting soil.

C. Planting Soil: Manufactured soil that is modified with soil amendments and perhaps fertilizers to produce a soil mixture best for plant growth.

D. Manufactured Topsoil: Soil produced off-site by homogeneously blending mineral soils or sand with stabilized organic soil amendments to produce topsoil or planting soil.

E. Subgrade: Surface or elevation of subsoil remaining after completing excavation, or top surface of a fill or backfill immediately beneath planting soil.

1.4 SUBMITTALS

A. Product Data: For each type of product indicated.

B. Certification of sod: from sod vendor for sod mixture stating the botanical and common name of each species and variety, and percentage of purity, germination, and weed seed. Include the year of production and date of packaging.
   1. Certification of sod mixture, identifying source, including name and telephone number of supplier.

C. Product Certificates: For soil amendments and fertilizers, signed by product manufacturer.

D. Qualification Data: For landscape Installer.

E. Material Test Reports: For existing surface soil and imported topsoil.

F. Planting Schedule: Indicating anticipated planting dates for each type of planting.

1.5 QUALITY ASSURANCE

A. Installer Qualifications: A qualified landscape installer whose work has resulted in successful lawn establishment.

   1. Installer's Field Supervision: Require Installer to maintain an experienced full-time supervisor on Project site when planting is in progress.

B. Soil-Testing Laboratory Qualifications: An independent laboratory, recognized by the State Department of Agriculture, with the experience and capability to conduct the testing indicated and that specializes in types of tests to be performed.

C. Topsoil and Planting Soil Analysis: Furnish soil analysis by a qualified soil-testing laboratory stating percentages of organic matter; gradation of sand, silt, and clay content; cation exchange capacity; deleterious material; pH; and mineral and plant-nutrient content of topsoil.

   1. Report suitability of topsoil for lawn and plant growth. State recommended quantities of nitrogen, phosphorus, and potash nutrients and soil amendments to be added to produce satisfactory topsoil.

   2. Topsoil and Planting Soil shall be tested at a rate of no less than one sample for every 500 tons of topsoil.

   3. After submitting the topsoil and planting soil mix for approval and upon approval of the Landscape Architect, the material shall be released from its stockpile location for transport to the project site. In the event that an unacceptable mix is placed on the field, the mix will be removed and disposed of at the Contractor’s expense and all material shall be re-tested before topsoiling can continue.

   4. A complete fertilization program based on the topsoil and subgrade test results shall be submitted to the Landscape Architect for approval. The Contractor shall be required to fertilize and amend the fields as determined by the testing reports and approved by the Landscape Architect.

1.6 DELIVERY, STORAGE, AND HANDLING

A. Sod and Seed shall not be stored on site for more than 24 hours before it is placed.

B. Do not deliver more sod and seed than can be laid within 24 hours.

1.7 SCHEDULING

A. Planting Restrictions: Plant during one of the following periods. Coordinate planting periods with maintenance periods to provide required maintenance from date of Completion.

1. Spring Planting: 3/1-4/30
2. Fall Planting: 8/15-11/15

B. Weather Limitations: Proceed with planting only when existing and forecasted weather conditions permit.

1.8 LAWN MAINTENANCE

A. Begin maintenance immediately after each area is planted and continue until acceptable lawn is established, but for not less than the following periods:

1. Lawns: 4 months from date of Completion.

a. When full maintenance period has not elapsed before end of planting season, or if lawn is not fully established, continue maintenance during next planting season.

B. Maintain and establish lawn by watering, fertilizing, weeding, mowing, trimming, replanting, and other operations. Roll, regrade, and replant bare or eroded areas and remulch to produce a uniformly smooth lawn.

1. In areas where mulch has been disturbed by wind or maintenance operations, add new mulch. Anchor as required to prevent displacement.

C. Watering: Contractor to water and maintain temporary piping, hoses, or lawn-watering equipment to convey water from sources and to keep lawn uniformly moist to a depth of 4 inches.

1. Schedule watering to prevent drying out, wilting, puddling, erosion, and displacement of sod, seed or mulch. Lay out temporary watering system to avoid walking over muddy or newly planted areas.
2. Rate: Water lawn at a rate required to achieve sustainable growth and establishment for all lawn and sod areas. Watering may be needed on a daily basis for successful lawn establishment for a minimum of 4 months or longer.
3. Frequency: As required to achieve sustainable growth and lawn establishment for a minimum of 4 months.
4. If temporary irrigation is approved by the Owner and installed, the contractor is responsible for the removal and disconnection of all materials after successful lawn establishment or a minimum of 4 months.

D. Lawn Fertilization/ Postfertilization: Apply fertilizer after mowing and when grass is dry.

1. Use fertilizer that will provide actual nitrogen of at least 1lb/1000 sq. ft. (0.45 kg/92.9 sq. m) to lawn areas.

2. Fertilize Lawn with a starter fertilizer and two additional applications of fertilizer per year.

PART 2 - PRODUCTS

2.1 TOPSOIL AND PLANTING SOIL

A. Revise topsoil characteristics to suit project. Unamended or raw topsoil, even agricultural topsoil, seldom contains more than 1 or 2 percent organic matter. To comply with astm d 5268, topsoil must have an organic material content range of 2 to 20 percent. Planting soil is produced by mixing topsoil or surface soil with organic matter or other soil amendments and perhaps fertilizers.

B. The new topsoil and planting soil shall be a natural or manufactured sandy loam soil as classified by the U.S. Department of Agriculture Soil Classification system. The soil shall contain not less than 3% or more than 8% organic matter by weight as determined by ASTM F1647.

C. Topsoil and Planting Soil shall not have a pH of less than 6.0 or greater than 7.0. Topsoil shall not be delivered or used for planting while in a frozen or wet condition.

D. Topsoil and Planting Soil shall also be free of Quack-grass rhizomes, Agropyron Repens, and the nut-like tubers of Nutgrass, Cyperus Esculentus, and all other noxious weeds

E. Any natural topsoil or topsoil used in a manufactured soil shall be taken from a well drained, arable site, free from sub-soil, large stones, sticks, stumps, roots, or other objectionable, extraneous matter of debris.

F. Topsoil and Planting Soil source: Import topsoil or manufacture topsoil from off-site sources. Obtain topsoil and planting soil from naturally well-drained construction or mining sites where topsoil occurs at least 4 inches deep. Do not obtain from bogs or marshes.

G. Topsoil shall have the following properties:

Texture	Particle Size (mm)	% Retained
Gravel	> 2.0	< 15% *
Sand	2.0 - 0.05	60-70 % **
Silt	0.05 – 0.002	15 – 25%
Clay	< 0.002	5 – 20%

* Maximum gravel size shall be no larger than ¾" diameter.
** No less than 60% of the sand shall fall within the medium through very coarse sand fractions (0.25 mm – 2 mm).

H. If organic amendments are needed to obtain the specified organic matter content listed above, the Contractor may add a peat or compost material.

I. The peat shall be Canadian sphagnum peat having an ash content not exceeding 15% as determined by ASTM D-2974.

J. Composts may be used provided that the material has been composted in an in-vessel system and it meets the following criteria:
   1. An organic matter content of no less than 40% as determined by ASTM D2974.
   2. A moisture content of 35-75% as determined by ASTM D2974.
   3. A carbon/nitrogen ratio of 15:1 to 30:1.
   4. Soluble salts not to exceed 6mS.
   5. A Solvita Index of 6 to 8.
   6. 95-100% passing a 3/8" screen
   7. A pH of 6 to 8.
   8. Non-phytotoxic.
   9. Meet all state and federal standards for land application of compost.

2.2 FERTILIZER

A. Starter Fertilizer shall be 10-20-20 Turf Fertilizer with 10% nitrogen, 20% ammonium phosphate and 20% potassium sulfate, with 6.8% total sulfur. Coverage rate shall be 50lbs – 5000 sq. ft.

B. Commercial-grade complete fertilizer shall be 16-5-9 homogeneous fertilizer with 16% ammoniacal nitrogen, 5% ammonium phosphate and 9% potassium sulfate, with 20% total sulfur. Coverage rate shall be 50lbs – 10,000 sq. ft.

C. Before any fertilizer is placed, the Contractors testing agent shall submit a soil report for the subbase and topsoil material to determine if alterations to the fertilization program need to be made.

2.3 SOD

A. Sod shall be high quality, free of weeds, disease and insect, and of good color and density. Sod shall be machine cut at a uniform soil thickness necessary for plant viability during the harvest, transport, and installation cycle.

B. The sod shall have been grown on a mineral based soil with the usda classification of loam to sandy loam texture with the soil to be approved by the contractor's independent testing agent. Sod grown on high organic soils will not be allowed.

C. Sod shall be machine cut at a uniform thickness of (1/4") inch, +/- (1/8") inch at the time of cutting. Measurement for thickness shall exclude top growth and thatch.

D. Sod shall be at least nine (9) months old and no more than eighteen (18) months old from time of original seeding.

E. Sod shall be furnished and installed in big rolls only. Rolls shall be 250 square feet each with dimensions of 4' x 62.5'. Rolls shall be stored with the grass side inverted so the topsoil is exposed to the exterior. Maximum allowable deviation from standard width and length shall be no more than five (5%) percent.

F. **SOD** shall be the following blend:
   1. 45% rebel eveda turf type type tall fescue
   2. 45% justice turf type tall fescue
   3. 10% bluegrass blend (Seed Mix: 30% Midnight Star Kentucky Bluegrass, 30% Brilliant Kentucky Bluegrass, 40% P105 Kentucky Bluegrass)

G. Sod shall be harvested, delivered and installed within a period of twenty-four (24) hours. Soil on sod rolls shall be kept moist at all times.

2.4 STRAW MULCH

A. Straw Mulch: Provide air-dry, clean, mildew- and seed-free, salt hay or threshed straw of wheat, rye, oats, or barley.

B. Asphalt Emulsion: ASTM D 977, Grade SS-1; nontoxic and free of plant-growth or germination inhibitors.

2.5 SEED

A. Seed is only to be used to repair lawn areas where disturbed for construction processes.

B. Grass Seed: Fresh, clean, dry, new-crop seed complying with AOSA's "Journal of Seed Technology; Rules for Testing Seeds" for purity and germination tolerances.

C. Each shipment of grass seed mixture shall be accompanied by a certified weight slip and any analysis of the composition, purity and germination of the seed mixture certified by the seed house and furnished at the time of delivery.

D. **LAWN SEED -** shall be the following blend:
1. 70% Premium Turf Type Tall Fescue
2. 20% Turf Type Perennial Ryegrass
3. 10% Improved Turf Type Kentucky Bluegrass

PART 3 - EXECUTION

3.1 EXAMINATION

A. Examine areas to receive lawns and grass for compliance with requirements and other conditions affecting performance. Proceed with installation only after unsatisfactory conditions have been corrected.

3.2 PREPARATION

A. Protect structures, utilities, sidewalks, pavements, and other facilities, trees, shrubs, and plantings from damage caused by planting operations.

1. Protect adjacent and adjoining areas from hydro seeding overspray.

B. Provide erosion-control measures to prevent erosion or displacement of soils and discharge of soil-bearing water runoff or airborne dust to adjacent properties and walkways.

C. Perform clearing and grubbing as necessary to remove vegetation and objectionable material from the site. All areas designated as “SOD LAWN”, vegetation to be removed, and under areas to receive new pavement shall be cleared and grubbed of all vegetation, weeds, large stones and construction debris and ready for topsoil placement. Clear the

site only as indicated and remove the cleared materials and debris from the site. Clearing and grubbing shall include removing the top 4 inches of the existing ground.

3.3 TOPSOILING

A. Topsoil material shall be stockpiled off-site to the recommendations of the Contractor's Testing Agent. No Material shall be delivered to the site until it has been approved by the Landscape Architect upon review of the testing agent's reports on the stockpiles.

B. Every load of topsoil delivered to the site will be visually inspected for excessive contamination and obvious clumps of peat, compost, or topsoil not properly ground into the blend.

C. Apply the topsoil over the sub-grade to a minimum uniform depth of 4 inches and to the finished grades shown on the drawings.

D. Material shall be installed in a moist condition. Topsoil shall be installed within 1/4 inch in 25 feet in either direction plus or minus the elevations shown in the drawings when compacted. CONTRACTOR shall move the topsoil from the stockpile in such a manner that contaminated materials are not tracked onto the field from the tracks or tires. Any contamination or over compacted conditions will require immediate action by the CONTRACTOR to satisfy the intent of the specifications. Under no circumstance are trucks loaded with topsoil to drive over topsoil already placed on the field.

E. Compaction of Topsoil: The soil shall be spread on the field and firmed to a compaction level not to exceed 85% maximum standard proctor density. Fill in low spots to finish grade with topsoil. The process shall be repeated as necessary to bring the field to finish grade within the tolerances described. Finish grades shall be verified by survey instruments as specified in other sections of the specification. Field compaction shall not exceed standard proctor density.

F. Topsoil shall be placed to a uniform depth of 4" across the entire area disturbed by construction activities where lawn is to be established

3.4PLANTING SOIL

A. See specification section 329300 "Plantings" for planting soil placement.

3.5 FERTLIZING

A. Once the Landscape Architect has accepted the topsoil planarity, the topsoil will be tested for soil fertility, and a complete fertilization program will be recommended by the Contractor's testing agent. The CONTRACTOR shall be required to fertilize the fields as recommended by the Contractor's testing agent and approved by the Landscape Architect.

B. At a minimum, starter fertilizer shall be 10-20-20 Turf Fertilizer with 10% nitrogen, 20% ammonium phosphate and 20% potassium sulfate, with 6.8% total sulfur. Coverage rate shall be 50lbs – 5000 sq. ft.

C. The fertilizer shall be blended into the top 1" of the topsoil and mixed thoroughly before any seed is placed.

D. After the seed has grown in for one (1) month, the Contractor shall apply a commercial-grade complete fertilizer, 16-5-9 with 16% ammoniacal nitrogen, 5% ammonium phosphate and 9% potassium sulfate, with 20% total sulfur. Coverage rate shall be 50lbs – 10,000 sq. ft.

3.6 SODDING

A. Immediately after fertilizing is complete and the topsoil has been scarified and ready for sod, the topsoil shall be lightly watered to create a moist surface for the sod to be placed.

B. The sod shall be laid smoothly, edge to edge, and where continuous or solid sodding is called for on the plans, sod shall be laid with the longest dimension parallel to the contours. Sodding shall start at the base of the slopes and progress upwards in continuous parallel rows. Vertical joints between sods shall be staggered. Immediately after laying, sod shall be pressed firmly into contact with the sod bed by light rolling, or by other approved methods so as to eliminate all air pockets, provide true and even surfaces, insure knitting and protect all exposed sod edges, but without displacement of the sod or deformation of the sod surface.

C. Sod shall be harvested, delivered and transplanted within a period of twenty-four (24) hours.

D. Sod shall be watered immediately during and after installation to prevent drying. It shall then be thoroughly irrigated to a depth sufficient that the underside of the new sod pad, and soil immediately below the pad, is thoroughly wet. Watering of the lawn areas shall be the responsibility of the Contractor until final acceptance.

E. Protection of Sodded Areas: Provide approved protection for sodded areas against trespassing and damage until final acceptance. Should any sod be damaged before final acceptance, repair and replace damaged areas.

3.7SEEDING & MULCHING

A. Sow seed with spreader or seeding machine. Do not broadcast or drop seed when wind velocity exceeds 5 mph. Evenly distribute seed by sowing equal quantities in two directions at right angles to each other.

1. Do not use wet seed or seed that is moldy or otherwise damaged.

B. Sow seed at the rate of 50 lb – 7,500 sq. ft.

C. Rake seed lightly into top 1/8 inch of topsoil, roll lightly, and water with fine spray.

D. Protect seeded areas by spreading straw mulch. Spread uniformly at a minimum rate of 2 tons/acre to form a continuous blanket 1-1/2 inches in loose depth over seeded areas. Spread by blower, or other suitable equipment.

1. Bond straw mulch by spraying with asphalt emulsion at the rate of 10 to 13 gal./1000 sq. ft.. Take precautions to prevent damage or staining of structures or other plantings adjacent to mulched areas. Immediately clean damaged or stained areas.

3.8SATISFACTORY LAWNS

A. Satisfactory Seeded Lawn: At end of maintenance period, a healthy, uniform, close stand of grass has been established, free of weeds and surface irregularities, with coverage exceeding 90 percent over any 10 sq. ft. (0.92 sq. m) and bare spots not exceeding 5 by 5 inches.

3.9CLEANUP AND PROTECTION

A. Promptly remove soil and debris created by lawn work from paved areas. Clean wheels of vehicles before leaving site to avoid tracking soil onto roads, walks, or other paved areas.

B. Erect barricades and warning signs as required to protect newly planted areas from traffic. Maintain barricades throughout maintenance period and remove after lawn is established.

C. Remove erosion-control measures after grass establishment period.

END OF SECTION 329200

SECTION 32 93 00 - PLANTINGS

PART 1 - GENERAL

1.1 RELATED DOCUMENTS

A. Drawings and general provisions of the Contract, including General and Supplementary Conditions and Division 1 Specification Sections, apply to this Section.

1.2 SUMMARY

A. Section Includes:

1. Plant Material.
2. Planting soils
3. Light Weight Planting Soil for Garden Roof
4. Tree stabilization.
5. Mulch.
6. Landscape edgings.

B. Furnish all labor, equipment, and materials necessary for the planting and maintenance of trees, shrubs, vines, and ground cover as shown on the drawing and in a manner specified herein and in the Contract Drawings.

*****Lawns, Grasses, and Plantings shall not be performed until all other work of the project has been completed.**

*****Once planting beds are established, heavy equipment cannot be used on site.**

C. Related Sections:

1. "Site Clearing" for protection of existing trees and plantings, topsoil stripping and stockpiling, site clearing, and temporary soil erosion and sediment control.
2. "Earthwork" for excavation, filling, and rough grading and drainage backfill materials.
3. “Storm Drainage” for subsurface aggregate drainage, perforated drainage pipe, and filter fabric.
4. "Lawns and Grasses" for topsoil, fertilizer, sod and seed.

1.3 DEFINITIONS

A. Backfill: The earth used to replace or the act of replacing earth in an excavation.

B. Balled and Burlapped Stock: Plants dug with firm, natural balls of earth in which they were grown, with ball size not less than diameter and depth recommended by ANSI Z60.1 for type and size of plant required; wrapped with burlap, tied, rigidly supported, and drum laced with twine with the root flare visible at the surface of the ball as recommended by ANSI Z60.1.

C. Duff Layer: The surface layer of native topsoil that is composed of mostly decayed leaves, twigs, and detritus.

D. Finish Grade: Elevation of finished surface of planting soil.

E. Garden Roof -- An area of planting/landscaping, built up on a waterproofed substrate at any level that is separated from the natural ground by a man-made structure.

F. Manufactured Topsoil: Soil produced off-site by homogeneously blending mineral soils or sand with stabilized organic soil amendments to produce topsoil or planting soil.

G. Pesticide: A substance or mixture intended for preventing, destroying, repelling, or mitigating a pest. This includes insecticides, miticides, herbicides, fungicides, rodenticides, and molluscicides. It also includes substances or mixtures intended for use as a plant regulator, defoliant, or desiccant.

H. Pests: Living organisms that occur where they are not desired, or that cause damage to plants, animals, or people. These include insects, mites, grubs, mollusks (snails and slugs), rodents (gophers, moles, and mice), unwanted plants (weeds), fungi, bacteria, and viruses.

I. Planting Area: Areas to be planted.

J. Planting Soil: Manufactured soil that is modified with soil amendments and perhaps fertilizers to produce a soil mixture best for plant growth.

K. Plant; Plants; Plant Material: These terms refer to vegetation in general, including trees, shrubs, vines, ground covers, ornamental grasses, bulbs, corms, tubers, or herbaceous vegetation.

L. Root Flare: Also called "trunk flare." The area at the base of the plant's stem or trunk where the stem or trunk broadens to form roots; the area of transition between the root system and the stem or trunk.

M. Stem Girdling Roots: Roots that encircle the stems (trunks) of trees below the soil surface.

N. Subgrade: Surface or elevation of subsoil remaining after excavation is complete, or the top surface of a fill or backfill before planting soil is placed.

O. Subsoil: All soil beneath the topsoil layer of the soil profile, and typified by the lack of organic matter and soil organisms.

P. Surface Soil: Soil that is present at the top layer of the existing soil profile at the Project site. In undisturbed areas, the surface soil is typically topsoil; but in disturbed areas such as urban environments, the surface soil can be subsoil.

1.4 SUBMITTALS

A. Product Data: For each type of product indicated, including soils.

1. Plant Materials: Include quantities, sizes, quality, and sources for plant materials.
2. Pesticides and Herbicides: Include product label and manufacturer's application instructions specific to the Project.
3. Fertilizer Planting Granules.
4. Planting Soil
5. Top Soil

Product Samples: Contractor shall provide samples of the Planting Soil, Top Soil and Light Weight Planting Medium in a minimum one gallon container and all other items as specified on the Drawings

B. Qualification Data: Only a Landscape Contractor with a minimum of five (5) years experience in successfully working on projects of similar scope, size, and using equal or larger tree caliper sizes shall be approved. Submit qualifications including at least three past clients on projects of this scope for review by the Owner's representative for approval.

C. Product Certificates: For each type of manufactured product, from manufacturer, and complying with the following:

1. Manufacturer's certified analysis of standard products.
2. Analysis of other materials by a recognized laboratory made according to methods established by the Association of Official Analytical Chemists, where applicable.

D. Material Test Reports: For existing native surface topsoil and imported or manufactured topsoil.

E. Maintenance Instructions: Recommended procedures to be established by Owner for maintenance of plants during a calendar year. Submit before start of required maintenance periods.

F. Warranty: Sample of special warranty.

1.5 QUALITY ASSURANCE

A. Installer Qualifications: See Specification Section 2920 Lawns and Grasses, Item 1.5 sub-item A for soil testing laboratory qualifications.

B. Soil-Testing Laboratory Qualifications: See Specification Section 2920 Lawns and Grasses, Item 1.5 sub-item B for soil testing laboratory qualifications.

C. See Specification Section 2920 Lawns and Grasses, Item 1.5 sub-item C for soil analysis.

D. Provide quality, size, genus, species, and variety of plants indicated, complying with applicable requirements in ANSI Z60.1.

E. Measurements: Measure according to ANSI Z60.1. Do not prune to obtain required sizes.

1. Trees and Shrubs: Measure with branches and trunks or canes in their normal position. Take height measurements from or near the top of the root flare for field-grown stock and container grown stock. Measure main body of tree or shrub for height and spread; do not measure branches or roots tip to tip. Take caliper measurements 6 inches above the root flare for trees up to 4-inch caliper size, and 12 inches above the root flare for larger sizes.
2. Other Plants: Measure with stems, petioles, and foliage in their normal position.

F. Plant Material Selection: All plant material shall be sourced and located within a 250 mi radius of the project site.

G. Plant Material Observation: Landscape Architect shall observe plant material either at place of growth and at site before planting for compliance with requirements for genus, species, variety, cultivar, size, and quality. Landscape Architect retains right to observe trees and shrubs further for size and condition of balls and root systems, pests, disease symptoms, injuries, and latent

defects and to reject unsatisfactory or defective material at any time during progress of work. Remove rejected trees or shrubs immediately from Project site.

1.6 DELIVERY, STORAGE, AND HANDLING

A. Packaged Materials: Deliver packaged materials in original, unopened containers showing weight, certified analysis, name and address of manufacturer, and indication of conformance with state and federal laws if applicable.

B. Bulk Materials:

1. Do not dump or store bulk materials near structures, utilities, walkways and pavements, or on existing turf areas or plants.
2. Provide erosion-control measures to prevent erosion or displacement of bulk materials, discharge of soil-bearing water runoff, and airborne dust reaching adjacent properties, water conveyance systems, or walkways.
3. Accompany each delivery of bulk fertilizers, lime, and soil amendments with appropriate certificates.

C. Do not prune trees and shrubs before delivery. Protect bark, branches, and root systems from sun scald, drying, wind burn, sweating, whipping, and other handling and tying damage. Do not bend or bind-tie trees or shrubs in such a manner as to destroy their natural shape. Provide protective covering of plants during shipping and delivery. Do not drop plants during delivery and handling.

D. Handle planting stock by root ball and as specified on the “Planting Details” sheet in the drawings.

E. Deliver plants after preparations for planting have been completed, and install immediately. If planting is delayed more than six hours after delivery, set plants and trees in their appropriate aspect (sun, filtered sun, or shade), protect from weather and mechanical damage, and keep roots moist. Area reserved for plant storage shall be approved by the Owner’s Representative.
1. Set balled stock on ground and cover ball with soil, peat moss, sawdust, or other acceptable material.
2. Water root systems of plants stored on-site deeply and thoroughly with a fine-mist spray. Water as often as necessary to maintain root systems in a moist, but not overly-wet condition.

1.7 PROJECT CONDITIONS

A. Planting Restrictions: Plant during one of the following periods. Coordinate planting periods with maintenance periods to provide required maintenance from date of Substantial Completion. If planting shall occur outside of these dates the CONTRACTOR is responsible for any additional maintenance required to maintain healthy plant establishment and growth. This additional maintenance shall include but is not limited to extra watering or fertilizing as directed by the Landscape Architect or Owners Representative.

1. Spring Planting: 3/1-4/30
2. Fall Planting: 8/15-11/15

B. Weather Limitations: Proceed with planting only when existing and forecasted weather conditions permit planting to be performed when beneficial and optimum results may be

obtained. Apply products during favorable weather conditions according to manufacturer's written instructions and warranty requirements.

C. Coordination with Turf Areas (Lawns): Plant trees, shrubs, and other plants after finish grades are established and before planting turf areas unless otherwise indicated.

1. When planting trees, shrubs, and other plants after planting turf areas, protect turf areas, and promptly repair damage caused by planting operations.

1.8 WARRANTY

A. Special Warranty: Installer agrees to repair or replace plantings and accessories that fail in materials, workmanship, or growth within specified warranty period.

1. Failures include, but are not limited to, the following:

a. Death and unsatisfactory growth.
b. Structural failures including plantings falling or blowing over.
c. Faulty performance of tree stabilization.
d. Deterioration of metals, metal finishes, and other materials beyond normal weathering.

2. Warranty Periods from Date of Project Completion:

a. Trees, Shrubs, Vines, and Ornamental Grasses: 24 months.
b. Ground Covers, Biennials, Perennials, and Other Plants: 24 months.

3. Include the following remedial actions as a minimum:

a. Immediately remove dead plants and replace unless required to plant in the succeeding planting season.
b. Replace plants that are more than 25 percent dead or in an unhealthy condition at end of warranty period.
c. Provide extended warranty for period equal to original warranty period, for replaced plant material.

1.9 MAINTENANCE SERVICE WARRANTY

A. Initial Maintenance Service for Landscaping: Provide maintenance by skilled employees of landscape Installer. Maintain as required in Part 3. Begin maintenance immediately after plants and lawns are installed and continue until plantings are acceptably healthy and well established but for not less than maintenance period below.

1. Base Bid Maintenance Service Warranty: 24 months from date of Substantial Completion.

PART 2 - PRODUCTS

2.1 PLANT MATERIAL

A. General: Furnish nursery-grown plants true to genus, species, variety, cultivar, stem form, shearing, and other features indicated in Plant Schedule or Plant Legend shown on Drawings and complying with ANSI Z60.1; and with healthy root systems developed by transplanting or root pruning. Provide well-shaped, fully branched, healthy, vigorous stock, densely foliated when in leaf and free of disease, pests, eggs, larvae, and defects such as knots, sun scald, injuries, abrasions, and disfigurement.

1. Trees with damaged, crooked, or multiple leaders; tight vertical branches where bark is squeezed between two branches or between branch and trunk ("included bark"); crossing trunks; cut-off limbs more than 3/4 inch in diameter; or with stem girdling roots will be rejected.
2. Collected Stock: Do not use plants harvested from the wild, from native stands, from an established landscape planting, or not grown in a nursery unless otherwise indicated.
3. Shade trees shall have a straight, single leader with no branching below the heights specified in the plant list on Sheet L-105 and above the crown of the rootball.

B. Provide plants of sizes, grades, and ball or container sizes complying with ANSI Z60.1 for types and form of plants required. Plants of a larger size may be used if acceptable to Landscape Architect, with a proportionate increase in size of roots or balls with not additional cost to the owner.

C. Quality and Size: Nursery grown, habit of growth that is normal for the species, sound, healthy, vigorous and free from insects, diseases, and injuries. Equal to or exceed measurements specified in plant list. Plants measured before pruning with branches in normal position; necessary pruning done at time of planting as recommended by the Landscape Architect. Sizes and methods of handling according to the code of standards recommended by the AAN and ANSI.

D. Substitutions: If a plant is not available, the Landscape Contractor is to notify the Owner's representative. The Landscape Architect will then provide a name of a source or select a reasonable alternate.

E. Root-Ball Depth: Furnish trees and shrubs with root balls measured from top of root ball, which shall begin at root flare according to ANSI Z60.1. Root flare shall be visible before planting.

F. Labeling: Label at least one plant of each variety, size, and caliper with a securely attached, waterproof tag bearing legible designation of common name and full scientific name, including genus and species. Include nomenclature for hybrid, variety, or cultivar, if applicable for the plant as shown on Drawings.

G. If formal arrangements or consecutive order of plants is shown on Drawings, select stock for uniform height and spread, and number the labels to assure symmetry in planting.

H. Contractor shall tag all trees in the nursery for approval by the Owner's Landscape Architect. Trees shall bear the Landscape Architects waterproof numbered tamper proof seal. Only trees approved shall be transplanted to the project site. All seals must remain on the tree until planted in their proper location and only removed at the direction of the Landscape Architect or Owner's Representative.

2.2 INORGANIC SOIL AMENDMENTS

A. Lime: ASTM C 602, agricultural liming material containing a minimum of 80 percent calcium carbonate equivalent and as follows:
   1. Finely ground agricultural or granulated lime (slow release and dustless), ground so that 50% passes 100 mesh sieve.
   2. Coarser material will be acceptable provided the specified rates of application are increased proportionately on the basis of quantities passing the 100 mesh sieve.
   3. Dolomitic limestone to be used when magnesium content of the soil is low.

B. Sulfur: Granular, biodegradable, and containing a minimum of 90 percent sulfur, with a minimum of 99 percent passing through No. 6 sieve and a maximum of 10 percent passing through No. 40 sieve.

C. Iron Sulfate: Granulated ferrous sulfate containing a minimum of 20 percent iron and 10 percent sulfur.

D. Aluminum Sulfate: Commercial grade, unadulterated.

E. Perlite: Horticultural perlite, soil amendment grade.

F. Agricultural Gypsum: Minimum 90 percent calcium sulfate, finely ground with 90 percent passing through No. 50 sieve.

G. Sand: Clean, washed, natural or manufactured, and free of toxic materials.

H. Diatomaceous Earth: Calcined, 90 percent silica, with approximately 140 percent water absorption capacity by weight.

I. Zeolites: Mineral clinoptilolite with at least 60 percent water absorption by weight.

2.3 ORGANIC SOIL AMENDMENTS

A. Compost: Well-composted, stable, and weed-free organic matter, pH range of 5.5 to 8; moisture content 35 to 55 percent by weight; 100 percent passing through 1/2-inch sieve; soluble salt content of 5 to 10 decisiemens/m; not exceeding 0.5 percent inert contaminants and free of substances toxic to plantings; and as follows:

   1. Organic Matter Content: 50 to 60 percent of dry weight.
   2. Feedstock: Agricultural, food, or industrial residuals; biosolids; yard trimmings; or source-separated or compostable mixed solid waste.

B. Sphagnum Peat: Partially decomposed sphagnum peat moss, finely divided or granular texture, with a pH range of 3.4 to 4.8.

C. Muck Peat: Partially decomposed moss peat, native peat, or reed-sedge peat, finely divided or of granular texture, with a pH range of 6 to 7.5, and having a water-absorbing capacity of 1100 to 2000 percent.

D. Wood Derivatives: Decomposed, nitrogen-treated sawdust, ground bark, or wood waste; of uniform texture and free of chips, stones, sticks, soil, or toxic materials.

E. Manure: Well-rotted, unleached, stable or cattle manure containing not more than 25 percent by volume of straw, sawdust, or other bedding materials; free of toxic substances, stones, sticks, soil, weed seed, debris, and material harmful to plant growth.

2.4 FERTILIZERS

A. An all-in-one planting survival granules fertilizer containing a mychorrhiza inoculant, a transplant concentrate, a water holding gel and volcanic rock crystals. To be used for tree and shrub plantings only.

1. Fertilizer 2-3-2---52%
    a. Total Nitrogen (N) 2% (1.73% Ammonical, 0.27% Water Soluble Organic Nitrogen)
    b. Available Phosphate (P205) 3%
    c. Soluble Potash (K20)2%

2. Mycorrhiza inoculant--- 10%
   (Contains 12 hardy EndoEctomycorrhizal Fungi providing for broad spectrum applications, enhanced moisture and nutrient uptake and a more fibrous and efficient root system. Pisolithus tintoris (1,000,000), Rhizopogon villosuius (500,000), Rhizopogon luteolus (500,000),Rhizopogon amylopogon (500,000), Rhizopogon fulvigleba (500,000).Endomycorrhiza (VAM - All @1,000 sproes per pound minimum).Glomus mosseae, Glomus intratadices, Glomus Ctarum, Glomusmonosprous, Glomus deserticola, Glomus brasilianum, Glomus margarita.

3. Transplant Concentrate --- 8%
   Rich in solube sea plant extract and humic substances to enhance root growth, stress tolerance and improve cell wall turgity.

4. Water Holding Gel --- 10%
   A Co-Polyer of Polacrylamide to decrease potential damage from unexpected dry conditions as well as other drought related stress symptoms.

5. Volcanic Rock Crystals --- 20%
   Adds porosity to soils for greater air infiltration and significantly reduces compaction characteristics.

2.5 PLANTING SOILS

A. Planting Soil: Any existing surface soil is not viable planting soil. Planting soil shall natural, fertile, friable loam or sandy loam, as required by soil physical analysis. Planting soil shall be manufactured off-site according to soil type and texture in section 329200 Lawns and Grasses Item 2.2.

B. All planting areas shall have a planting soil depth as depicted on the drawings planting details unless noted otherwise.

2.6 MULCHES

A. Organic Mulch: Free from deleterious materials and suitable as a top dressing of trees and shrubs, consisting of the following:

1. Type: Shredded hardwood bark mulch, which shall be double hammer milled composed of hardwood, cedar, and hemlock blend free of stones, soil, seed and phyto-toxic substances.

2.7 PESTICIDES

A. General: Pesticide registered and approved by EPA, acceptable to authorities having jurisdiction, and of type recommended by manufacturer for each specific problem and as required for Project conditions and application. Do not use restricted pesticides unless authorized in writing by authorities having jurisdiction.

B. Selective Herbicide: Developed specifically to kill herbaceous weeds, and seedlings. Herbacides shall be applied strictly in accordance with manufacturer's recommendations and application instructions.

C. Pre-Emergent Herbicide (Selective and Non-Selective): Developed specifically for pre-emergent control of herbaceous weeds and seedlings. Herbicide shall be applied strictly in conformance with manufacturer's recommendations and application instructions.

D. Post-Emergent Herbicide (Selective and Non-Selective): Effective for controlling weed growth that has already germinated.

2.8 TREE STABILIZATION MATERIALS

A. Stakes and Guys:

1. Upright and Guy Stakes: Rough-sawn, sound, new hardwood, free of knots, holes, cross grain, and other defects, 2-by-2-inch nominal by length indicated, pointed at one end.
2. Guys and Tie Wires: ASTM A 641/A 641M, Class 1, galvanized-steel wire, two-strand, twisted, 0.106 inch in diameter.
3. Twisted wires shall not come in direct contact with the tree but shall be covered with new black two-ply, reinforced fiber bearing or rubber garden hose, not less than one-half (1/2) in. inside diameter.

2.9 MISCELLANEOUS PRODUCTS

A. Antidesiccant: Water-insoluble emulsion, permeable moisture retarder, film forming, for trees and shrubs. Deliver in original, sealed, and fully labeled containers and mix according to manufacturer's written instructions.

B. Burlap: Non-synthetic, biodegradable.

PART 3 - EXECUTION

3.1 EXAMINATION

A. Examine areas to receive plants for compliance with requirements and conditions affecting installation and performance.

1. Verify that no foreign or deleterious material or liquid such as paint, paint washout, concrete slurry, concrete layers or chunks, cement, plaster, oils, gasoline, diesel fuel, paint thinner, turpentine, tar, roofing compound, or acid has been deposited in soil within a planting area.
2. When obstructions below ground or poor drainage affect the contract operation, proposed adjustments to plant location, Type of plant and planting method, or drainage correction shall be submitted to and approved by the Landscape Architect.
3. Do not mix or place soils and soil amendments in frozen, wet, or muddy conditions.
4. Suspend soil spreading, grading, and tilling operations during periods of excessive soil moisture until the moisture content reaches acceptable levels to attain the required results.
5. Uniformly moisten excessively dry soil that is not workable and which is too dusty.

B. Proceed with installation only after unsatisfactory conditions have been corrected.

C. If contamination by foreign or deleterious material or liquid is present in soil within a planting area, remove the soil and contamination as directed by Architect and replace with new planting soil.

3.2 PREPARATION

A. Protect structures, utilities, sidewalks, pavements, and other facilities and turf areas and existing plants from damage caused by planting operations.

B. Where planting beds occur in existing turf areas, the turf shall be removed to a depth that will ensure the removal of the entire root system.

C. Install erosion-control measures to prevent erosion or displacement of soils and discharge of soil-bearing water runoff or airborne dust to adjacent properties and walkways.

D. Lay out individual tree and shrub locations and areas for multiple plantings. Stake plant material locations, outline planting bed areas, adjust locations when requested, and obtain Landscape Architect's acceptance of layout before excavating or planting. Make minor adjustments as required.

E. Apply antidesiccant to trees and shrubs using power spray to provide an adequate film over trunks (before wrapping), branches, stems, twigs, and foliage to protect during digging, handling, and transportation.

1. If deciduous trees or shrubs are moved in full leaf, spray with antidesiccant at nursery before moving and again two weeks after planting.

F. Wrap trees and shrubs with burlap fabric over trunks, branches, stems, twigs, and foliage to protect from wind and other damage during digging, handling, and transportation.

3.3 PLANTING AREA ESTABLISHMENT

A. Loosen subgrade of planting areas to a minimum depth of 12 inches. Remove stones larger than 1 inch in any dimension and sticks, roots, rubbish, and other extraneous matter and legally dispose of them off Owner's property.

1. Apply fertilizer directly to subgrade before loosening.

2. Thoroughly blend planting soil off-site before spreading.

    a. Delay mixing fertilizer with planting soil if planting will not proceed within a few days.
    b. Mix lime with dry soil before mixing fertilizer.

3. Spread planting soil to depth and extent as indicated on the construction documents but not less than required to meet finish grades after natural settlement. Do not spread if planting soil or subgrade is frozen, muddy, or excessively wet.

B. Finish Grading: Grade planting areas to a smooth, uniform surface plane with loose, uniformly fine texture. Roll and rake, remove ridges, and fill depressions to meet finish grades.

C. Before planting, obtain Landscape Architect's acceptance of finish grading; restore planting areas if eroded or otherwise disturbed after finish grading.

3.4 PLANTING SOIL INSTALLATION

A. Planting Soil and shall be placed carefully to avoid damage or displacement of other materials such as walls, paving, drainage components, filter fabric, and roofing membrane.

B. Planting Soil shall be placed to within 1 inch greater than final grade or to a depth of no greater than 8 inches and compacted as described in 3.08.C. below. For final grades less than 8 inches only one round of compaction shall be performed and remaining growing media loosely placed such that top of growing media exceeds final grade by 1 inch (see 3.4D below). For final grades greater than 8 inches, place growing media at no greater than 6 inches and repeat procedure until growing media has been compacted within 1 inch of final grade.

C. Compaction shall be performed with a 300 – 400 lb. landscape roller to achieve a 50 – 60 % compaction. Mechanical compactors including plate compactors are not recommended.

D. After compaction remaining planting media shall be placed at 1 inch greater than final grade and thoroughly watered or jetted over entire area. Low settled areas shall be filled with additional growing media and re-wet to achieve uniform prescribed final grade.

3.5 EXCAVATION FOR TREES AND SHRUBS

A. Planting Holes and Trenches: Shall be dug to produce vertical sides and flat, un-compacted bottoms. When holes are dug with an auger and the sides of the holes become glazed, the glazed surface shall be scarified. The size of the plant hole shall be as shown on the Contract Drawings. Trim perimeter of bottom leaving center area of bottom raised slightly to support root ball and assist in drainage away from center. Do not further disturb base. Ensure that root ball will sit on undisturbed base soil to prevent settling. Scarify sides of planting pit smeared or smoothed during excavation.

1. Excavate approximately three times as wide as ball diameter for balled and burlapped stock or as shown on the Contract Drawings.
2. Do not excavate deeper than depth of the root ball, measured from the root flare to the bottom of the root ball.
3. If area under the plant was initially dug too deep, add soil to raise it to the correct level and thoroughly tamp the added soil to prevent settling.

4. Maintain required angles of repose of adjacent materials as shown on the Drawings. Do not excavate subgrades of adjacent paving, structures, hardscapes, or other new or existing improvements.
5. Maintain supervision of excavations during working hours.
6. Keep excavations covered or otherwise protected when unattended by Contractor's personnel.

B. Subsoil and topsoil removed from excavations of existing conditions may not be used as planting soil and must be removed and disposed of from the site at Contractors expense.

C. Obstructions: Notify Landscape Architect if unexpected rock or obstructions detrimental to trees or shrubs are encountered in excavations.

D. Drainage: Notify Landscape Architect if subsoil conditions evidence unexpected water seepage or retention in tree or shrub planting pits.

3.6 TREE, SHRUB, AND VINE PLANTING

A. Before planting, verify that root flare is visible at top of root ball according to ANSI Z60.1. If root flare is not visible, remove soil in a level manner from the root ball to where the top-most root emerges from the trunk. After soil removal to expose the root flare, verify that root ball still meets size requirements.

B. Remove stem girdling roots and kinked roots. Remove injured roots by cutting cleanly; do not break.

C. Set balled and burlapped stock plumb and in center of planting pit or trench with root flare 2 inches above adjacent finish grades.

1. Use planting soil for backfill, Contractor shall notify Owner's Representative prior to backfilling for approval of planting hole
2. Thouroughly mix Fertilizer granules into planting soil to be used as backfill immediately surrounding rootball at the following rate:
   a. 8 oz per "EACH" one (1) inch to two (2) inch caliper of trunk diameter, OR each 5-7 gallon container, OR each 18-24" of plant height and spread.
3. After placing some backfill around root ball to stabilize plant, carefully cut and remove burlap, rope, and wire baskets from tops of root balls and from sides, but do not remove from under root balls. Remove pallets, if any, before setting. Do not use planting stock if root ball is cracked or broken before or during planting operation.
4. Backfill around root ball in layers, tamping to settle soil and eliminate voids and air pockets. When planting pit is approximately one-half filled, water thoroughly before placing remainder of backfill. Repeat watering until no more water is absorbed.
5. Continue backfilling process. Water again after placing and tamping final layer of soil.

D. When planting on slopes, set the plant so the root flare on the uphill side is flush with the surrounding soil on the slope; the edge of the root ball on the downhill side will be above the surrounding soil. Apply enough soil to cover the downhill side of the root ball.

3.7 TREE, SHRUB, AND VINE PRUNING

A. Remove only dead, dying, or broken branches.

B. Prune, thin, and shape trees, shrubs, and vines as directed by Landscape Architect.

C. Do not apply pruning paint to wounds.

D. Do not apply tree wrap to trunk.

3.8 TREE STABILIZATION

A. Install trunk stabilization as follows unless otherwise indicated:

1. Upright Staking and Tying: Stake trees of 2- through 5-inch caliper. Stake trees of less than 2-inch caliper only as required to prevent wind tip out. Use a minimum of three (3) stakes of length required to penetrate at least 18 inches below bottom of backfilled excavation and to extend one-third of trunk height above grade. Set vertical stakes and space to avoid penetrating root balls or root masses.
2. Use two stakes for trees up to 12 feet high and 2-1/2 inches or less in caliper; three stakes for trees less than 14 feet high and up to 4 inches in caliper. Space stakes equally around trees.
3. Support trees with two strands of tie wire, through rubber garden hose. Allow enough slack to avoid rigid restraint of tree.

B. Staking and Guying: Stake and guy trees more than 14 feet in height and more than 3 inches in caliper unless otherwise indicated. Securely attach no fewer than three guys to stakes 30 inches long, driven to grade.

3.9 PLANTING AREA MULCHING

A. Mulch backfilled surfaces of all planting beds, trenches and bed areas as indicated on the planting details on sheet L-102 and as directed by the Landscape Architect or Owner’s Representatve.

3.10 PLANT MAINTENANCE

A. Maintain plantings by pruning, cultivating, watering, weeding, fertilizing, mulching, restoring planting saucers, adjusting and repairing tree-stabilization devices, resetting to proper grades or vertical position, and performing other operations as required to establish healthy, viable plantings. Spray or treat as required to keep trees and shrubs free of insects and disease.

B. Fill in as necessary soil subsidence that may occur because of settling or other processes. Replace mulch materials damaged or lost in areas of subsidence.

C. Apply treatments as required to keep plant materials, planted areas, and soils free of pests and pathogens or disease. Use integrated past management practices whenever possible to minimize the use of pesticides and reduce hazards. Treatments include physical controls such as hosing off foliage, mechanical controls such as traps, and biological control agents.

3.11 PESTICIDE APPLICATION

A. Apply pesticides and other chemical products and biological control agents in accordance with authorities having jurisdiction and manufacturer's written recommendations. Coordinate

applications with Owner's operations and others in proximity to the Work. Notify Owner before each application is performed.

B. Pre-Emergent Herbicides (Selective and Non-Selective): Apply to tree, shrub, and ground-cover areas in accordance with manufacturer's written recommendations. Do not apply to seeded areas.

C. Post-Emergent Herbicides (Selective and Non-Selective): Apply only as necessary to treat already-germinated weeds and in accordance with manufacturer's written recommendations.

3.12 CLEANUP AND PROTECTION

A. During planting, keep adjacent paving and construction clean and work area in an orderly condition.

B. Protect plants from damage due to landscape operations and operations of other contractors and trades. Maintain protection during installation and maintenance periods. Treat, repair, or replace damaged plantings.

C. After installation and before Substantial Completion, remove nursery tags, nursery stakes, tie tape, labels, wire, burlap, and other debris from plant material, planting areas, and Project site.

3.13 DISPOSAL

A. Remove surplus soil and waste material including excess subsoil, unsuitable soil, trash, and debris and legally dispose of them off Owner's property.

END OF SECTION 329300

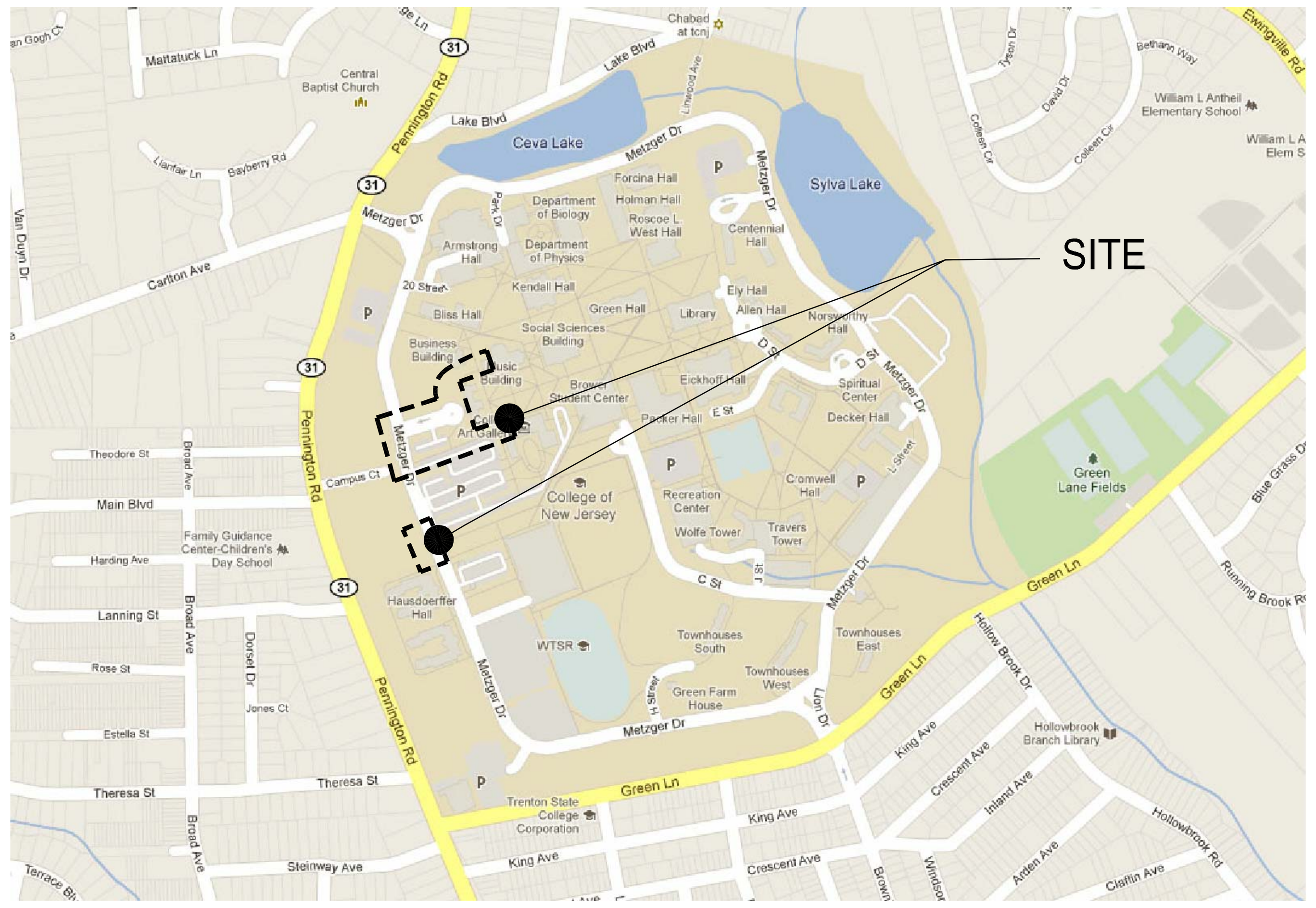

AREA PLAN
NOT TO SCALE

PEDESTRIAN BOULEVARD EXISTING CONDITIONS

PEDESTRIAN BOULEVARD EXISTING CONDITIONS

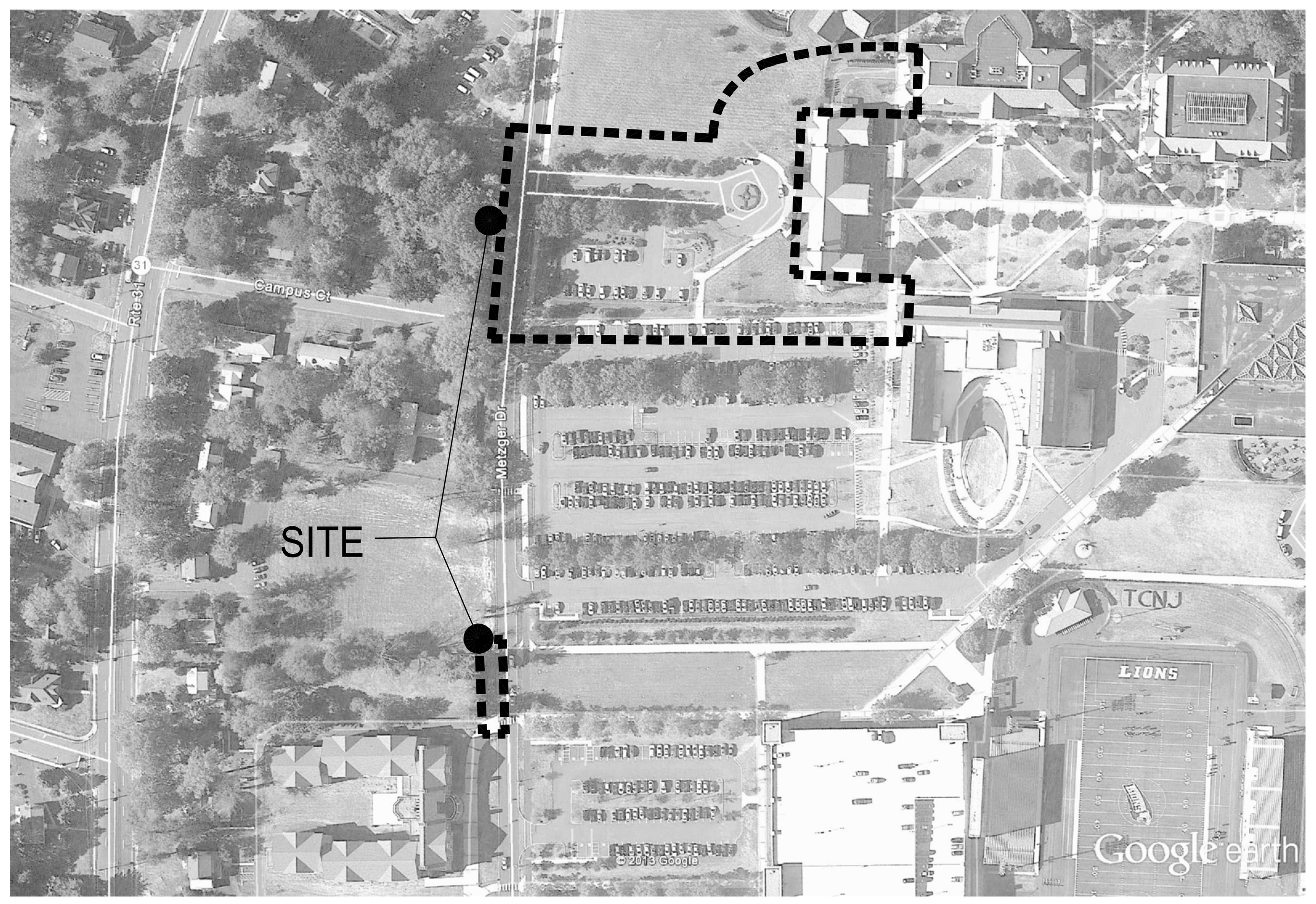

SITE AERIAL
NOT TO SCALE

METZGER DRIVE CROSSING AT LOSER HALL EXISTING CONDITIONS

MUSIC HALL PLAZA NODE EXISTING CONDITIONS

DRAWING INDEX	
LANDSCAPE ARCHITECTURAL	
CS	COVER SHEET
L101	SITE PLAN & GENERAL NOTES
L102	PLAN ENLARGEMENTS AND DETAILS
L103	PLANTING PLAN
L104	DETAILS
L104A	DETAILS
L105	PLANTING DETAILS AND NOTES
SITE/CIVIL	
C100	EXISTING CONDITIONS PLAN
C101	GRADING & SOIL EROSION & SEDIMENT CTRL PLAN
C102	SOIL EROSION AND SEDIMENT CTRL DETAILS
ELECTRICAL	
E101	SITE PLAN – ELECTRICAL
E102	DETAILS AND SPECIFICATIONS – ELECTRICAL

THE COLLEGE OF NEW JERSEY
CAMPUS TOWN SIDEWALKS AND PLANTINGS

MARCH 14, 2014

CS

Clarke Caton Hintz

The College of New Jersey
2000 PENNINGTON ROAD
PO BOX 7718
EWING, NJ 08628

100% CD
SUBMISSION

LANDSCAPE ARCHITECT
NJ LICENSE #AS00612
MICHAEL F. SULLIVAN
DATE 03/14/14

Planning
Architecture
Landscape Architecture
Historic Preservation

Drawings Copyright © 2014 Clarke Caton Hintz, PC

100 Barrack Street
Trenton, NJ 08608
tel: (609) 883-8383
fax: (609) 883 4044
www.clarkecatonhintz.com

CCH PROJECT NUMBER: 9013

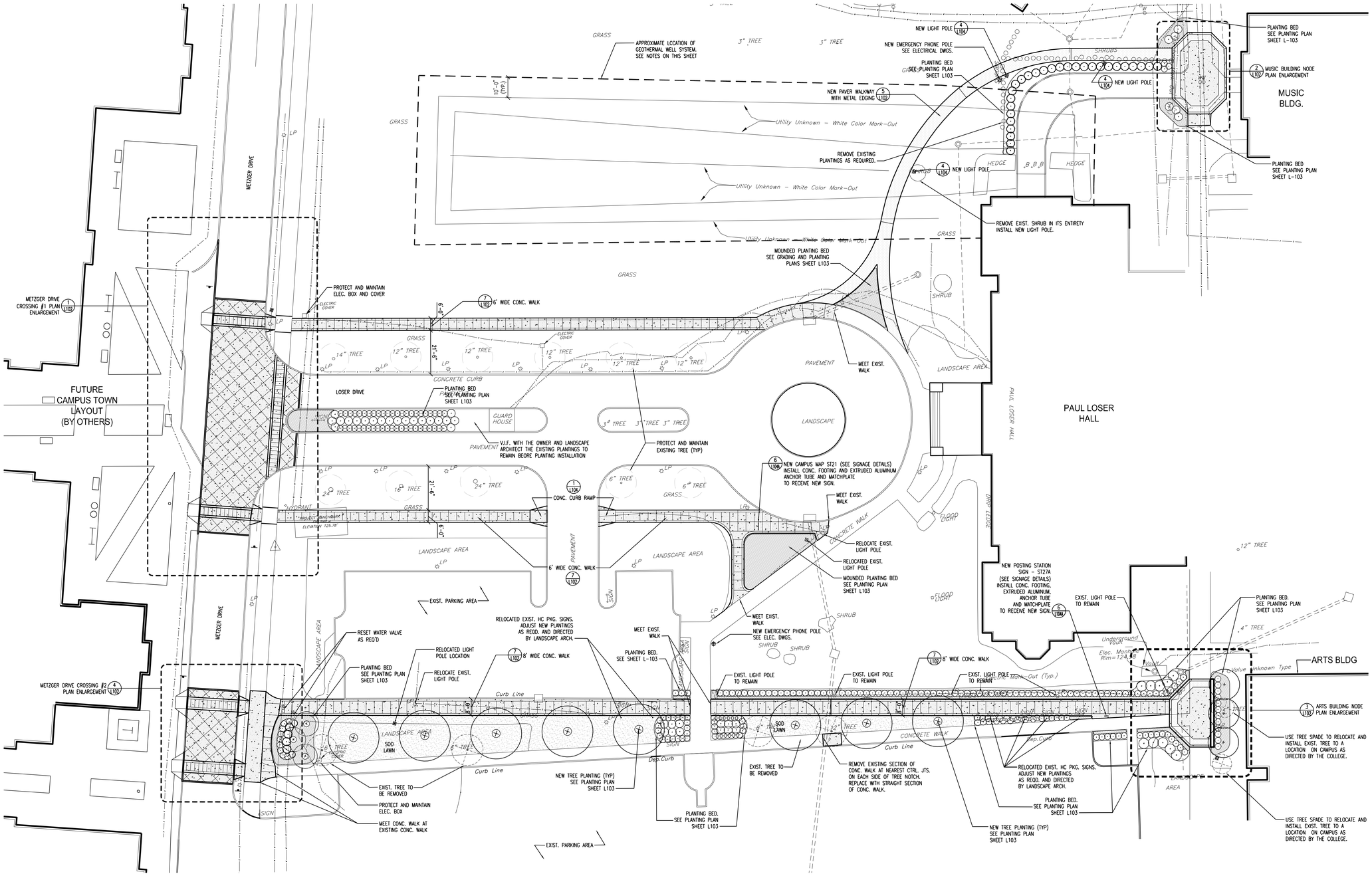

1 SITE PLAN

GENERAL NOTES

1. EXISTING CONDITIONS SHOWN HEREON ALSO BASED ON THE FOLLOWING PLANS: "TOPOGRAPHIC SITE SURVEY" BY MATRIX NEW WORLD ENGINEERS DATED 2/10/14. ALL UTILITIES SHOWN ON THE EXISTING CONDITIONS PLAN ARE FOR INFORMATIONAL PURPOSES AND WERE BASED ON MARK-OUTS BY THE COLLEGE OF NEW JERSEY. ALL UTILITIES SHOWN HEREON DEPICT APPROXIMATE LOCATIONS.
2. UTILITIES: THE CONTRACTOR SHALL VERIFY EXISTING CONDITIONS, WITH THE OWNER AND NOTIFY THE LOCAL UTILITY LOCATION COMPANY OF THE PROPOSED CONSTRUCTION. IN ADDITION, THE CONTRACTOR IS TO BE NOTIFIED WHICH UTILITIES, INCLUDING, ELECTRIC, WATER SERVICE, STORM AND SANITARY SEWERS ARE LOCATED IN THE VICINITY OF THE PROPOSED WORK. THE CONTRACTOR IS RESPONSIBLE FOR VERIFYING AND STAKING THE LOCATION OF ALL EXISTING UTILITIES AND PROTECTING THEM DURING THE WORK AND SHALL BEAR ANY COSTS TO REPAIR UTILITIES DAMAGED AS A CONSEQUENCE OF HIS WORK.
3. GEOTHERMAL WELL PROTECTION: A GEOTHERMAL WELL SYSTEM AND PIPING EXISTS ON SITE AND CURRENTLY SERVICES LOSER HALL. IT IS THE ONLY SOURCE OF HEATING AND AIR CONDITIONING FOR LOSER HALL. APPROXIMATE LOCATIONS OF EXISTING UNDERGROUND PIPES AND WELLS HAVE BEEN IDENTIFIED ON THE PLANS AS WELL AS AN APPROXIMATE BOUNDARY OF PROTECTION FOR INFORMATIONAL PURPOSES ONLY. THE CONTRACTOR MUST PROTECT AND MAINTAIN THIS SERVICE TO THE BUILDING AT ALL TIMES. IF THE SYSTEM IS DAMAGED AS A CONSEQUENCE TO CONSTRUCTION ACTIVITIES THE CONTRACTOR SHALL BE RESPONSIBLE FOR ALL COSTS AND REPAIRS NECESSARY TO PROVIDE SERVICE BACK TO ORIGINAL WORKING CONDITIONS. ALL REPAIRS SHALL BE PERFORMED IMMEDIATELY AFTER THE DAMAGE OCCURS. SPECIALIZED WELDING EQUIPMENT MAY BE REQUIRED FOR REPAIRS AND THE CONTRACTOR SHALL PLAN FOR SAME DAY REPAIRS AS REQUIRED. COORDINATE WITH THE COLLEGE REGARDING THE TYPE OF EQUIPMENT NEEDED FOR REPAIRS TO THE SYSTEM. NO HEAVY CONSTRUCTION EQUIPMENT WILL BE ALLOWED OVER THE GEOTHERMAL WELL FIELD AT ANY TIME. ALL SIDEWALKS AND PAVERS SHALL BE HAND-DUG AND HAND-LAID ONLY. MATERIAL SHALL BE WHEEL BARROWED IN AND PLACED IN ITS LOCATION.
4. EXISTING PLANTING AREAS: COORDINATE THE REMOVAL OF ALL EXISTING PLANTING/LANDSCAPE AREAS THAT ARE LOCATED WITHIN AREAS OF NEW CONSTRUCTION WITH THE LANDSCAPE ARCHITECT AND THE COLLEGE OF NEW JERSEY. ALL LANDSCAPE/PLANTING AREAS TO BE REMOVED SHALL BE REMOVED FROM SITE AT CONTRACTORS EXPENSE. ALL EXISTING TREES NOT DENOTED TO BE REMOVED SHALL BE PROTECTED FROM CONSTRUCTION ACTIVITIES. NO HEAVY EQUIPMENT SHALL BE USED WITHIN THE PROTECTION ZONES OF THE TREES TO REMAIN.
5. REQUIREMENTS: ALL WORK SHALL MEET OR EXCEED THE REQUIREMENTS OF ALL APPLICABLE FEDERAL, STATE AND LOCAL LAWS, ORDINANCES AND REQUIREMENTS.
6. PROTECTION OF EXISTING WORK:: IT SHALL BE THE CONTRACTOR'S RESPONSIBILITY TO PERFORM ALL WORK IN A MANNER THAT PROTECTS EXISTING CONDITIONS SUCH AS WALKS, CURBS, UTILITIES, STORM DRAINAGE, FENCES, DRIVEWAY APRONS, DRIVES, VEGETATION, ETC. THE CONTRACTOR SHALL BE RESPONSIBLE FOR THE COST OF SATISFACTORY REPAIR OF ALL DAMAGE IN KIND RESULTING FROM CONTRACTOR'S FAILURE TO COMPLY.
7. MATERIALS, WORKMANSHIP, AND CONSTRUCTION FOR THE SITE IMPROVEMENTS SHOWN HEREON SHALL BE IN ACCORDANCE WITH
   A. NEW JERSEY DEPARTMENT OF TRANSPORTATION "STANDARD SPECIFICATIONS FOR ROAD AND BRIDGE CONSTRUCTION", 2007; AS SUPPLEMENTED.
   B. CURRENT PREVAILING MUNICIPAL, COUNTY, AND/OR STATE AGENCY SPECIFICATIONS, STANDARDS, CONDITIONS, AND REQUIREMENTS.
   C. CURRENT PREVAILING UTILITY COMPANY/AUTHORITY SPECIFICATIONS, STANDARDS, AND REQUIREMENTS.
   D. CURRENT MANUFACTURER SPECIFICATIONS, STANDARDS, AND REQUIREMENTS.
8. SEE ELECTRICAL PLANS FOR ELECTRICAL SERVICE TO EACH PROPOSED AND RELOCATED LIGHT POLE FROM THE EXISTING ELECTRICAL SYSTEM. SEE ELECTRICAL DRAWINGS FOR THE DESIGN AND LOCATION OF THE TELECOMMUNICATION SERVICE FOR EACH EMERGENCY PHONE STANCHION WITHIN THE SITE AS EXTENDED FROM THE EXISTING TCNJ SYSTEMS.
9. ELECTRIC LINES WILL BE INSTALLED UNDERGROUND. CROSSINGS OF PROPOSED PAVEMENTS WILL BE INSTALLED PRIOR TO THE CONSTRUCTION OF PAVEMENT BASE COURSE, SEE ELECTRICAL DRAWINGS FOR ADDITIONAL INFORMATION.
10. UTILITY RELOCATIONS SHOWN HEREON, IF ANY, ARE FOR INFORMATIONAL PURPOSES ONLY AND MAY NOT REPRESENT ALL REQUIRED UTILITY RELOCATIONS, THE CONTRACTOR IS RESPONSIBLE FOR PERFORMING AND/OR COORDINATING ALL REQUIRED UTILITY RELOCATIONS IN COOPERATION WITH THE RESPECTIVE UTILITY COMPANY/AUTHORITIES AND TCNJ
11. CURBS SHALL BE DEPRESSED FLUSH WITH PAVEMENT WHERE REQUIRED, AND HANDICAPPED ACCESSIBLE RAMPS INSTALLED WHERE SIDEWALKS AND CROSSWALKS INTERSECT SAME , DETECTABLE WARNINGS (SEE SHEET L104 FOR SPECIFICATION) SHALL BE INCLUDED ON HANDICAP ACCESSIBLE RAMPS.
12. TRAFFIC SIGNAGE AND STRIPING SHALL CORRESPOND TO THE MANUAL ON UNIFORM TRAFFIC CONTROL DEVICES.
13. THIS IS A SITE DEVELOPMENT PLAN AND UNLESS SPECIFICALLY NOTED ELSEWHERE HERON, IS NOT A SURVEY.
14. DO NOT SCALE DRAWINGS AS THEY PERTAIN TO ADJACENT AND SURROUNDING PHYSICAL CONDITIONS, BUILDINGS, STRUCTURES, ETC. THEY ARE SCHEMATIC ONLY, EXCEPT WHERE DIMENSIONS ARE SHOWN THERETO.
15. THIS SET OF PLANS HAS BEEN PREPARED FOR THE PURPOSES OF AGENCY REVIEW AND APPROVAL. THIS SET OF PLANS SHALL NOT BE UTILIZED AS CONSTRUCTION DOCUMENTS UNTIL ALL APPROVALS REQUIRED HAVE BEEN OBTAINED, ALL CONDITIONS OF APPPROVAL HAVE BEEN SATISFIED AND THE DRAWINGS HAVE BEEN STAMPED "ISSUED FOR CONSTRUCTION", THIS SHALL INCLUDE APPROVAL OF ALL CATALOG CUTS, SHOP DRAWINGS AND/OR DESIGN CALCULATIONS AS REQUIRED BYTHE PROJECT OWNER AND/OR AGENCY ENGINEER.
16. EXISTING UTILITY INFORMATION SHOWN HEREON HAS BEEN COLLECTED FROM VARIOUS SOURCES AND IS NOT GUARANTEED AS TO ACCURACY OR COMPLETENESS. THE CONTRACTOR SHALL VERIFY ALL INFORMATION TO HIS SATISFACTION PRIOR TO EXCAVATION. WHERE EXISTING UTILITIES ARE TO BE CROSSED BY PROPOSED CONSTRUCTIONS, TEST PITS SHALL BE DUG BY THE CONTRACTOR PRIOR TO CONSTRUCTION TO ASCERTAIN EXISTING INVERTS, MATERIALS, AND SIZES. TEST PIT INFORMATION SHALL BE GIVEN TO THE ENGINEER PRIOR TO CONSTRUCTION TO PERMIT ADJUSTMENTS AS REQUIRED TO AVOID CONFLICTS. THE CONTRACTOR SHALL NOTIFY THE UNDER SIGNED PROFESSIONAL IMMEDIATELY IF ANY FIELD CONDITIONS ENCOUNTERED DIFFER MATERIALLY FROM THOSE REPRESENTED HEREON, SUCH CONDITIONS COULD RENDER THE DESIGNS HEREON INAPPROPRIATE OR INEFFECTIVE.
17. THE CONTRACTOR IS RESPONSIBLE FOR PROJECT SAFETY, INCLUDING PROVISION OF ALL APPROPRIATE SAFETY DEVICES AND TRAINING REQUIRED.
18. PURSUANT TO THE NEW JERSEY ONE CALL LAW, CONTRACTOR SHALL CALL 1-800.272-1000 OR 811 PRIOR TO ANY EXCAVATION TO REQUEST A MARKOUT OF UNDERGROUND UTILITIES. THE CONTRACTOR SHALL ALSO COORDINATE WITH TCNJ FOR ADDITIONAL MARKOUTS. TCNJ REQUIRES A MINIMUM 2 WEEK NOTICE FOR MARKOUT.
19. THE CONTRACTOR SHALL BE RESPONSIBLE FOR PREPARATION AND SUBMISSION OF CATALOG CUTS, SHOP DRAWINGS AND/OR DESIGN CALCULATIONS FOR APPROVAL BY OWNER OR OWNER REPRESENTATIVE.
20. THESE GENERAL NOTES SHALL APPLY TO ALL SHEETS IN THIS SET.

DEMO NOTES:

21. SCOPE OF WORK: ANY DAMAGE AS A RESULT OF CONSTRUCTION ACTIVITIES OUTSIDE THE SCOPE OF WORK SHALL BE THE RESPONSIBILITY OF THE CONTRACTOR DURING CONSTRUCTION. THE CONTRACTOR SHALL REPAIR AT THEIR EXPENSE ANY DAMAGE THAT OCCURS OUTSIDE OF THE SCOPE OF WORK OR DAMAGE THAT OCCURS TO ITEMS NOTED TO REMAIN.
22. BUILDING ENTRIES: ALL BUILDING ENTRY WAYS AND WALKWAYS SHALL BE PROTECTED AND MAINTAINED DURING CONSTRUCTION. SAFE PASSAGE SHALL BE MAINTAINED ENTERING AND EXITING BUILDINGS AT ALL TIMES DURING THE CONSTRUCTION PERIOD. COORDINATE POTENTIAL BUILDING AND WALKWAY ENTRANCE CLOSURES AND ALTERNATIVE PATHWAYS AROUND CONSTRUCTION ACTIVITIES WITH THE COLLEGE OF NEW JERSEY.
23. CONCRETE CURBS: EXCEPT WHERE NOTED, ALL CONCRETE CURBING TO BE REMOVED SHALL BE DEMOLISHED AND REMOVED FROM SITE. CONTRACTOR SHALL SAW CUT THE EXISTING CURB TO REMAIN AT THE LOCATIONS WHERE NEW CURB AND EXISTING CURB MEET. NEW CONCRETE CURB WILL BE CONSTRUCTED AND JOIN THE EXISTING CURB TO REMAIN AND MAINTAIN THE SAME VERTICAL ELEVATION.
24. LIGHTING: SEE ELECTRICAL DRAWINGS FOR REMOVAL AND RELOCATION OF EXISTING LIGHT POLE FIXTURES AND FOUNDATIONS.
25. GRADING AND DRAINAGE: EXISTING GRADING AND DRAINAGE PATTERNS SHALL BE RETAINED TO THE GREATEST EXTENT POSSIBLE EXCEPT AS NOTED ON THE GRADING PLAN. ALL WALKWAYS AND PLANTING AREAS SHALL MAINTAIN A MINIMUM 1% TO A MAXIMUM 2% GRADE AWAY FROM ALL STRUCTURES AND BUILDING ENTRANCES. THE CONTRACTOR SHALL VERIFY EXISTING GRADES AND DRAINAGE PATTERNS IN THE FIELD PRIOR TO INSTALLATION OF SITE IMPROVEMENTS.
26. MISCELLANEOUS SITE ELEMENTS: IF ANY QUESTIONS ARISE ABOUT ITEMS THAT SHALL REMAIN AND ITEMS THAT SHALL BE REMOVED THE CONTRACTOR SHALL NOTIFY THE ARCHITECT AND OWNER IMMEDIATELY PRIOR TO THE ITEMS REMOVAL FOR A RESOLUTION.
27. FOR ALL WORK TO BE COMPLETED WITHIN METZGER DRIVE, THE CONTRACTOR SHALL PROVIDE TWO (2) FLAGMEN TO SAFELY DIRECT AND CONTROL TRAFFIC ON METZGER DRIVE. FLAGMEN SHALL BE PRESENT AND NOT PART OF THE WORKING CREW DURING WORK ON METZGER DRIVE. THIS INCLUDES ANY WORK WHICH REQUIRES INTERRUPTION WITH TRAFFIC FLOW WITHIN THE METZGER DRIVE CARTWAY.
28. CAMPUS TOWN CURB RAMPS WILL BE COORDINATED WITH CURB CUTS SHOWN ON THESE DRAWINGS. CONTRACTOR IS RESPONSIBLE FOR THE CONSTRUCTION OF A NEW CURB AND CURB CUTS LOCATED ON THE WESTERN EDGE OF THE METZGER DRIVE AND AS DEPICTED ON THE DRAWINGS.
29. CONTRACTOR IS RESPONSIBLE FOR REMOVING AND LEGALLY DISPOSING OFF SITE OF ANY EXCESS FILL FROM CONSTRUCTION/PLANTING ACTIVITIES.

2 GENERAL NOTES

Clarke Caton Hintz
Architecture
Planning
Landscape Architecture
100 Barrack Street
Trenton, NJ 08608
tel: (609) 883-8383
fax: (609) 883-4044
www.clarkecatonhintz.com

Drawings Copyright ©2012 Clarke Caton Hintz, PC

OWNER:
THE COLLEGE OF NEW JERSEY
2000 PENNINGTON ROAD
EWING, NJ 08628
(609) 771-3315

SITE / CIVIL:
MATRIX NEW WORLD
442 STATE ROUTE 35, 2ND FLOOR
EATONTOWN, NJ 07724
(732) 588-2999

ELECTRICAL:
KELTER & GILLIGO
14 WASHINGTON RD.
PRINCETON JCT, NJ 08550
(609) 799-8336

SUBMISSIONS

NO.	DATE	DESCRIPTION
1	3/14/14	100% CD SUBMISSION

REVISIONS

LANDSCAPE ARCHITECT
NJ LICENSE #AS06612
MICHAEL F. SULLIVAN
DATE 03/14/14

CAMPUS TOWN SIDEWALKS
THE COLLEGE OF NEW JERSEY
EWING, NJ

DATE:	3/14/14
SCALE:	AS NOTED
DRAWN BY:	GKV
CHECKED BY:	MFS

SHEET TITLE:
SITE PLAN AND GENERAL NOTES

DRAWING NO.:
L101

CCH PROJECT NO: 9013

12314031201632I
gvaughn N:\9000\9013_TCNJ_Campus Town Sidewalks\DWGS\2-Sheets\L101.dwg

Clarke Caton Hintz
Architecture
Planning
Landscape Architecture

100 Barrack Street
Trenton, NJ 08608
tel: (609) 883-8383
fax: (609) 883 4044
www.clarkecatonhintz.com

Drawings Copyright ©2012 Clarke Caton Hintz, PC

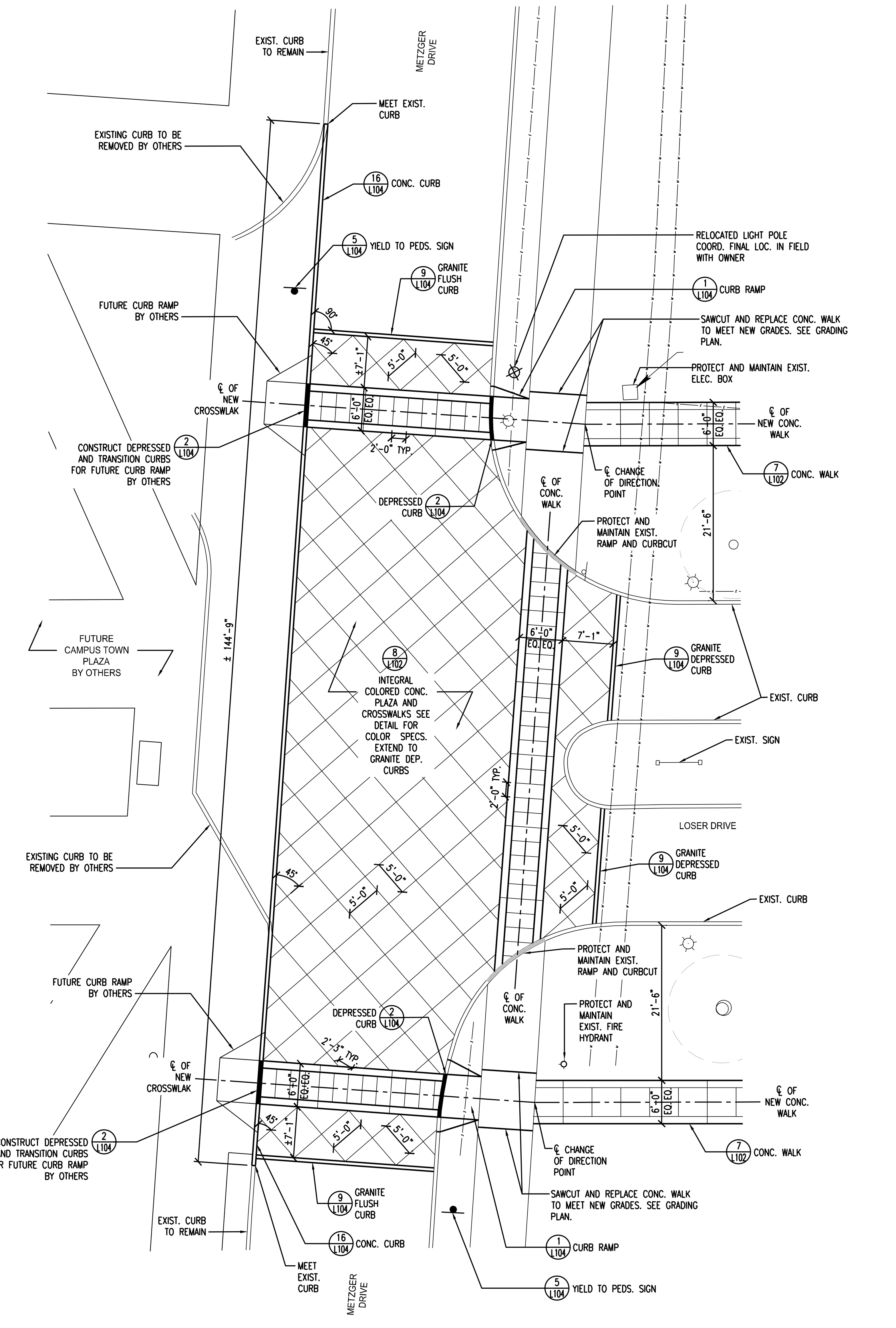

NOTES:
1. FINAL LAYOUT LOCATION AND SIZE OF ALL CONCRETE AND PAVER WALKS AND CONCRETE PLAZAS TO BE STAKED BY THE CONTRACTOR AND APPROVED BY THE OWNER AND LANDSCAPE ARCHITECT PRIOR TO INSTALLATION
2. ALL DIMENSIONS ARE FOR INFORMATIONAL PURPOSES ONLY. FINAL LOCATIONS AND MINOR ADJUSTMENTS MAY BE MADE IN THE FIELD TO ACCOMODATE ACTUAL FIELD CONDITIONS.
3. V.I.F. AND REMOVE EXISTING LANDSCAPE AREAS IN AREAS DESIGNATED FOR PAVED SURFACES AS REQUIRED AND DIRECTED BY THE OWNER AND LANDSCAPE ARCHITECT. REMOVE PLANT MATERIAL FROM SITE. SEE PLANTING PLAN FOR NEW PLANTINGS.
4. SEE GRADING PLAN FOR SPOT ELEVEATIONS AND GRADING

1 METZGER DRIVE CROSSING #1 PLAN ENLARGEMENT

0 10' 20' SCALE: 1" = 10'-0"

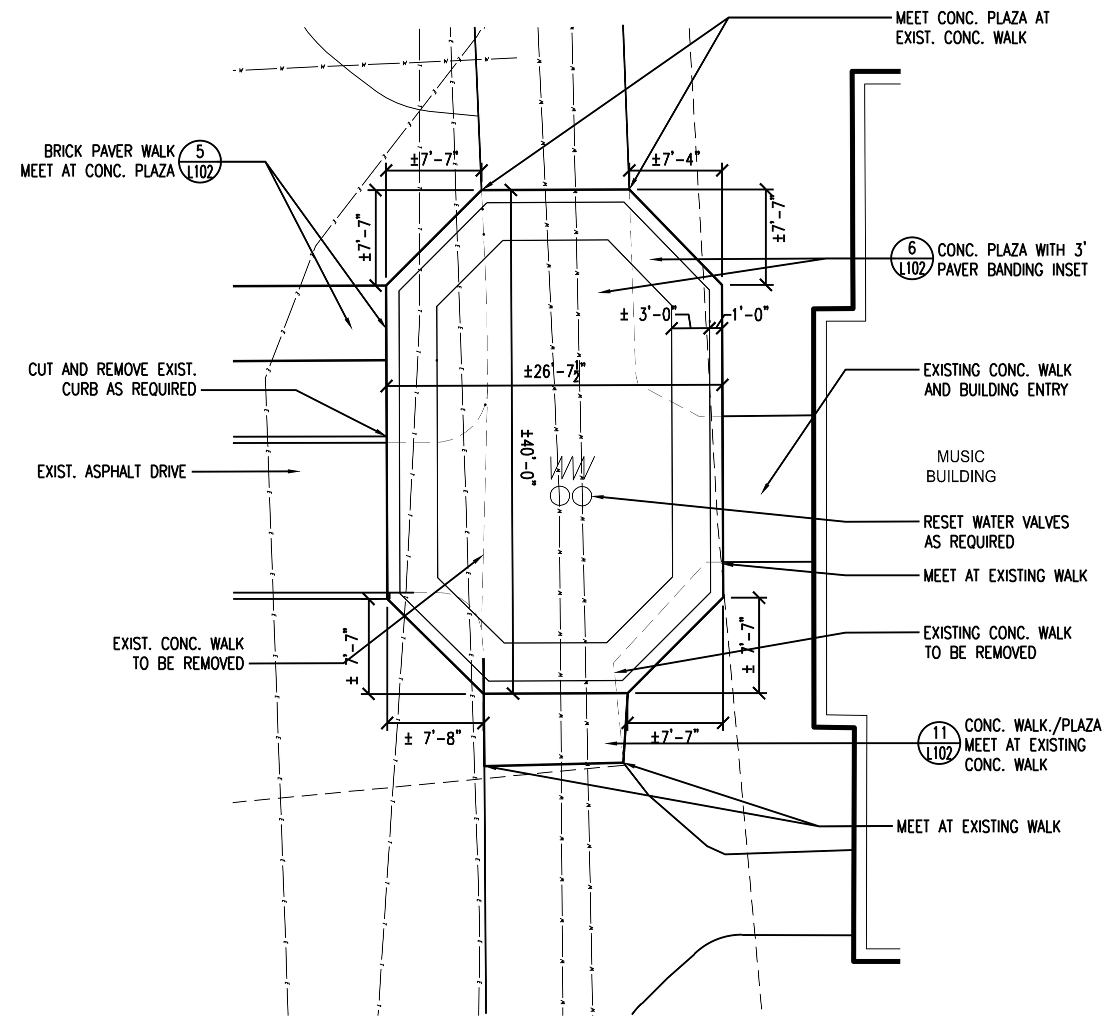

NOTES:
1. FINAL LAYOUT LOCATION AND SIZE OF ALL CONCRETE AND PAVER WALKS AND CONCRETE PLAZAS TO BE STAKED BY THE CONTRACTOR AND APPROVED BY THE OWNER AND LANDSCAPE ARCHITECT PRIOR TO INSTALLATION
2. ALL DIMENSIONS ARE FOR INFORMATIONAL PURPOSES ONLY. FINAL LOCATIONS AND MINOR ADJUSTMENTS MAY BE MADE IN THE FIELD TO ACCOMODATE ACTUAL FIELD CONDITIONS.
3. V.I.F. AND REMOVE EXISTING LANDSCAPE AREAS IN AREAS DESIGNATED FOR PAVED SURFACES AS REQUIRED AND DIRECTED BY THE OWNER AND LANDSCAPE ARCHITECT. REMOVE PLANT MATERIAL FROM SITE. SEE PLANTING PLAN FOR NEW PLANTINGS.
4. SEE GRADING PLAN FOR SPOT ELEVATIONS AND GRADING

2 MUSIC BUILDING NODE PLAN ENLARGEMENT

0 10' 20' SCALE: 1" = 10'-0"

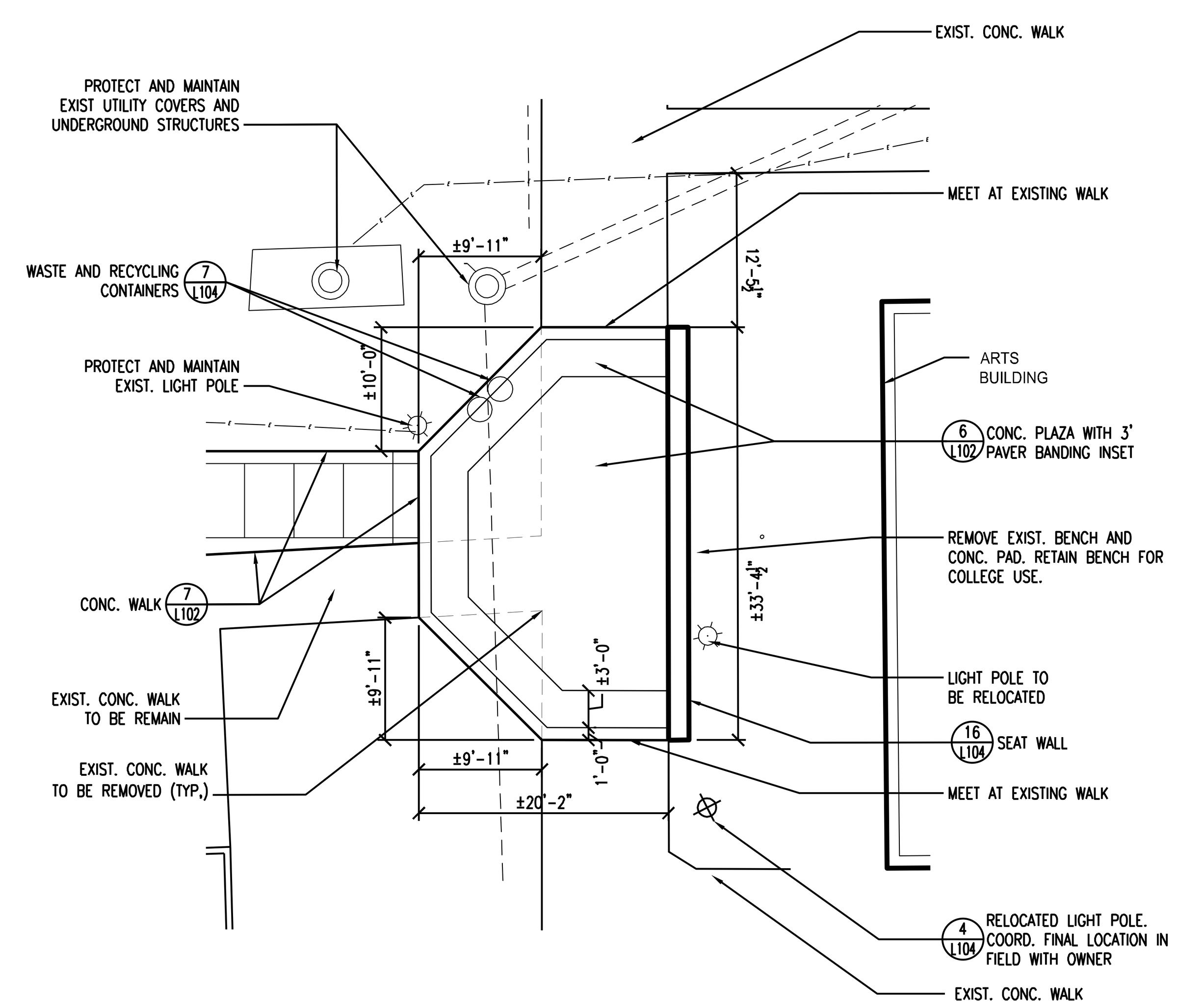

NOTES:
1. FINAL LAYOUT LOCATION AND SIZE OF ALL CONCRETE AND PAVER WALKS AND CONCRETE PLAZAS TO BE STAKED BY THE CONTRACTOR AND APPROVED BY THE OWNER AND LANDSCAPE ARCHITECT PRIOR TO INSTALLATION
2. ALL DIMENSIONS ARE FOR INFORMATIONAL PURPOSES ONLY. FINAL LOCATIONS AND MINOR ADJUSTMENTS MAY BE MADE IN THE FIELD TO ACCOMODATE ACTUAL FIELD CONDITIONS.
3. V.I.F. AND REMOVE EXISTING LANDSCAPE AREAS IN AREAS DESIGNATED FOR PAVED SURFACES AS REQUIRED AND DIRECTED BY THE OWNER AND LANDSCAPE ARCHITECT. REMOVE PLANT MATERIAL FROM SITE. SEE PLANTING PLAN FOR NEW PLANTINGS.
4. SEE GRADING PLAN FOR SPOT ELEVATIONS AND GRADING

3 ARTS BUILDING NODE PLAN ENLARGEMENT

0 10' 20' SCALE: 1" = 10'-0"

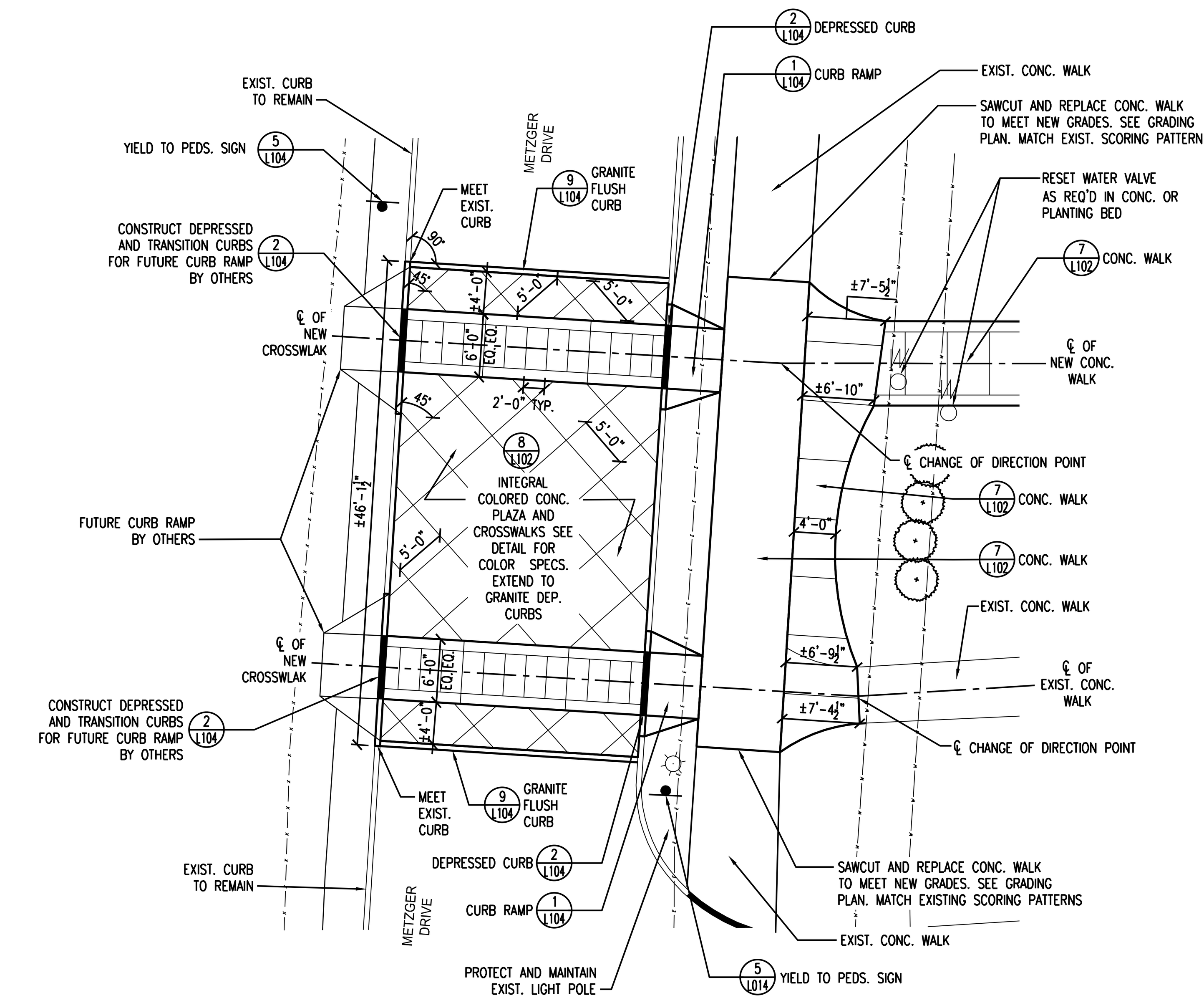

NOTES:
1. FINAL LAYOUT LOCATION AND SIZE OF ALL CONCRETE AND PAVER WALKS AND CONCRETE PLAZAS TO BE STAKED BY THE CONTRACTOR AND APPROVED BY THE OWNER AND LANDSCAPE ARCHITECT PRIOR TO INSTALLATION
2. ALL DIMENSIONS ARE FOR INFORMATIONAL PURPOSES ONLY. FINAL LOCATIONS AND MINOR ADJUSTMENTS MAY BE MADE IN THE FIELD TO ACCOMODATE ACTUAL FIELD CONDITIONS.
3. V.I.F. AND REMOVE EXISTING LANDSCAPE AREAS IN AREAS DESIGNATED FOR PAVED SURFACES AS REQUIRED AND DIRECTED BY THE OWNER AND LANDSCAPE ARCHITECT. REMOVE PLANT MATERIAL FROM SITE. SEE PLANTING PLAN FOR NEW PLANTINGS.
4. SEE GRADING PLAN FOR SPOT ELEVATIONS AND GRADING

4 METZGER DRIVE CROSSING #2 PLAN ENLARGEMENT

0 10' 20' SCALE: 1" = 10'-0"

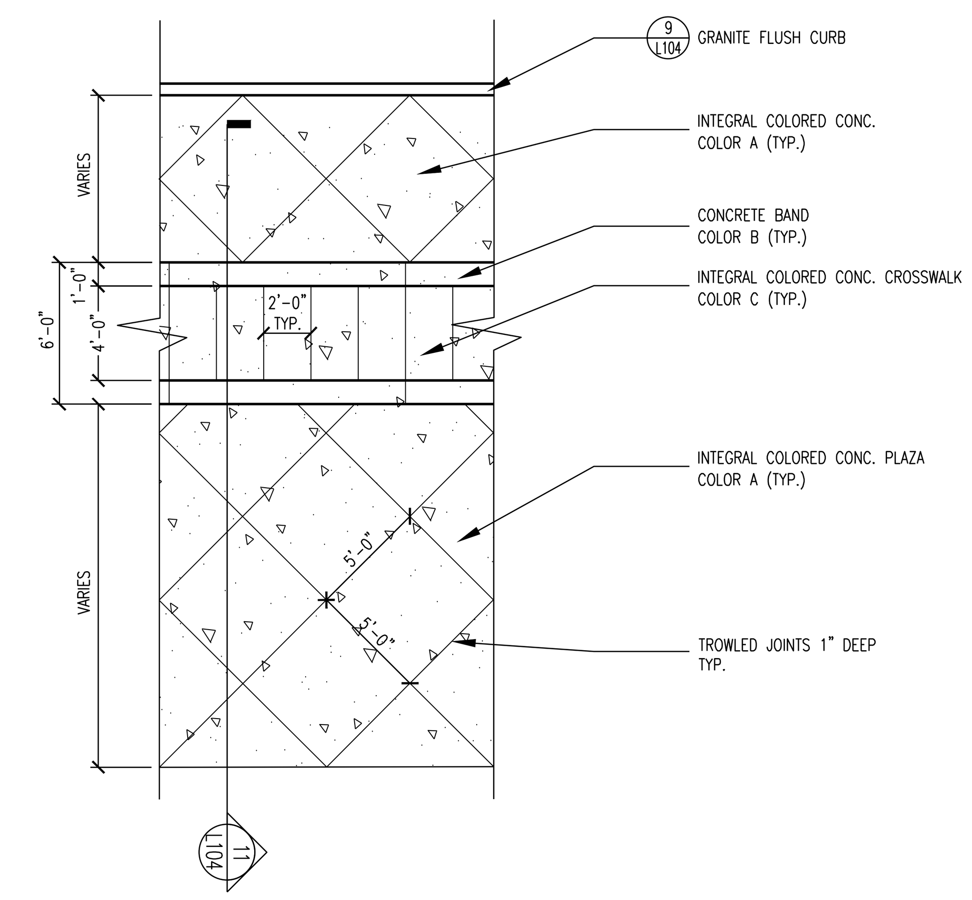

INTEGRAL COLORED CONCRETE:
BASIS OF DESIGN

MANUFACTURER:
SCOFIELD SYSTEMS
PH: 1-800-800-9900
WEB: HTTP://WWW.SCOFIELD.COM/
OR EQUIVALENT

TYPE: CHROMIX ADMIXTURE FOR COLORED CONCRETE

PATTERN: PATTERN AS SHOWN ON THIS DETAIL AND OR ON PLANS.

COLORS:

COLOR A: 5234 SUMMER BEIGE

COLOR B: 2543 LANDMARK GRAY

COLOR C: C-32 QUARRY RED

FINISH: ALL CONCRETE TO HAVE SLIP RESISTANT BROOM TEXTURE
FINISH PERPENDICULAR TO THE DIRECTION OF TRAVEL IN THE CROSSWALK

NOTES:
1. ALL COLORS TO BE INTEGRAL AND THROUGHOUT THE ENTIRE CONCRETE MIXTURE.
2. CONTRACTOR TO CREATE A MOCKUP AS SPECIFIED IN IN SECTION 033300 INTEGRALLY COLORED CONCRETE

8 PLAZA CROSSING AND CROSSWALKS PAVING DETAIL

NOT TO SCALE

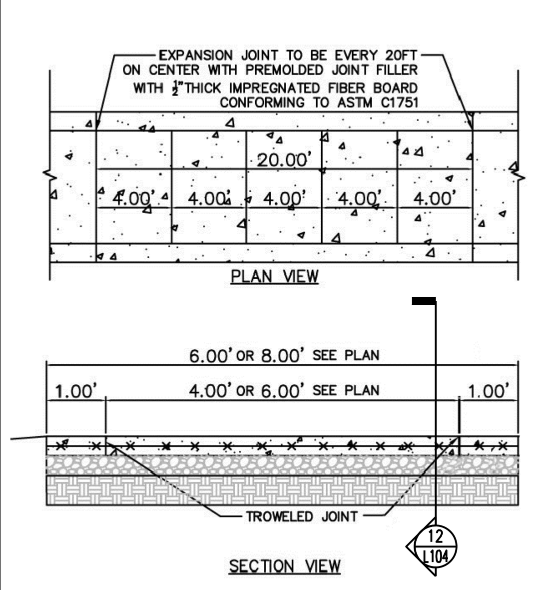

NOTES:
1. CONCRETE TO TEST 4,000 POUNDS PER SQUARE INCH MINIMUM ON 28 DAY COMPRESSIVE TEST, AIR ENTRAINED
2. ALL CONCRETE IS TO BE PROPERLY CURED PER THE CONCRETE PAVING SPECIFICATION SECTION 033200
3. CONCRETE SLUMP TO BE A MAXIMUM OF 3 INCHES
4. CONCRETE IS TO BE BROOM FINISHED TO PROVIDE A NON-SLIP SURFACE.
5. 1" DEEP CONTRACTION JOINTS ARE TO BE STRUCK AT 4' C-C.
6. A HALF INCH EXPANSION JOINT OF A NON-EXTRUDABLE, FIBROUS BITUMASTIC MATERIAL SHALL BE PLACED ON 20 FOOT CENTERS MAXIMUM AND RECESSED MAXIMUM 1/4" BELOW THE SURFACE.
7. CONTRACTORS TO NOTIFY DCA BLDG. INSPECTOR TWO DAYS PRIOR TO POURING.
8. A HALF INCH EXPANSION JOINT OF A NON-EXTRUDABLE, FIBROUS BITUMASTIC MATERIAL SHALL BE ADDED CONTINUOUSLY BETWEEN THE CURB AND SIDEWALK WHERE A GRASS AREA IS NOT PROVIDED.

NOTE:
SEE SITE PLAN FOR SCORING DETAILS OF SPECIALTY CONCRETE SIDEWALK AREAS.

STANDARD CONCRETE SIDEWALK DETAIL
N.T.S.

7 CONC. WALK DETAIL

SCALE: 1" = 2'-0"

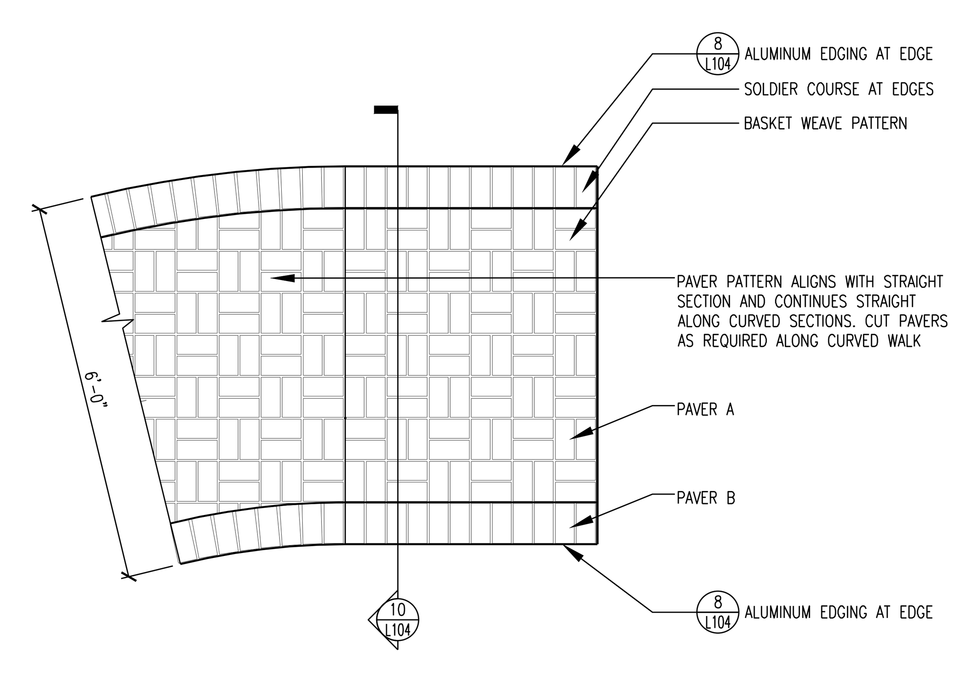

PAVER PATTERN PLAN

PAVER A:
BASIS OF DESIGN

MANUFACTURER:
EPHENRY,
HTTP://WWW.EPHENRY.COM/PAVERS/BRICKSTONE.ASPX
OR EQUIVALENT

TYPE: BRICK STONE CONCRETE BRICK PAVER

SIZE: 4"X8" NOMINAL

PATTERN: PATTERN AS SHOWN ON THIS DETAIL AND OR ON PLANS.

COLORS: AUTUMN BLEND

PAVER B:
BASIS OF DESIGN

MANUFACTURER:
EPHENRY,
HTTP://WWW.EPHENRY.COM/PAVERS/BRICKSTONE.ASPX
OR EQUIVALENT

TYPE: BRICK STONE CONCRETE BRICK PAVER

SIZE: 4"X8" NOMINAL

PATTERN: PATTERN AS SHOWN ON THIS DETAIL AND OR ON PLANS.

COLORS: CHARCOAL

5 UNIT PAVER WALK DETAIL

NOT TO SCALE

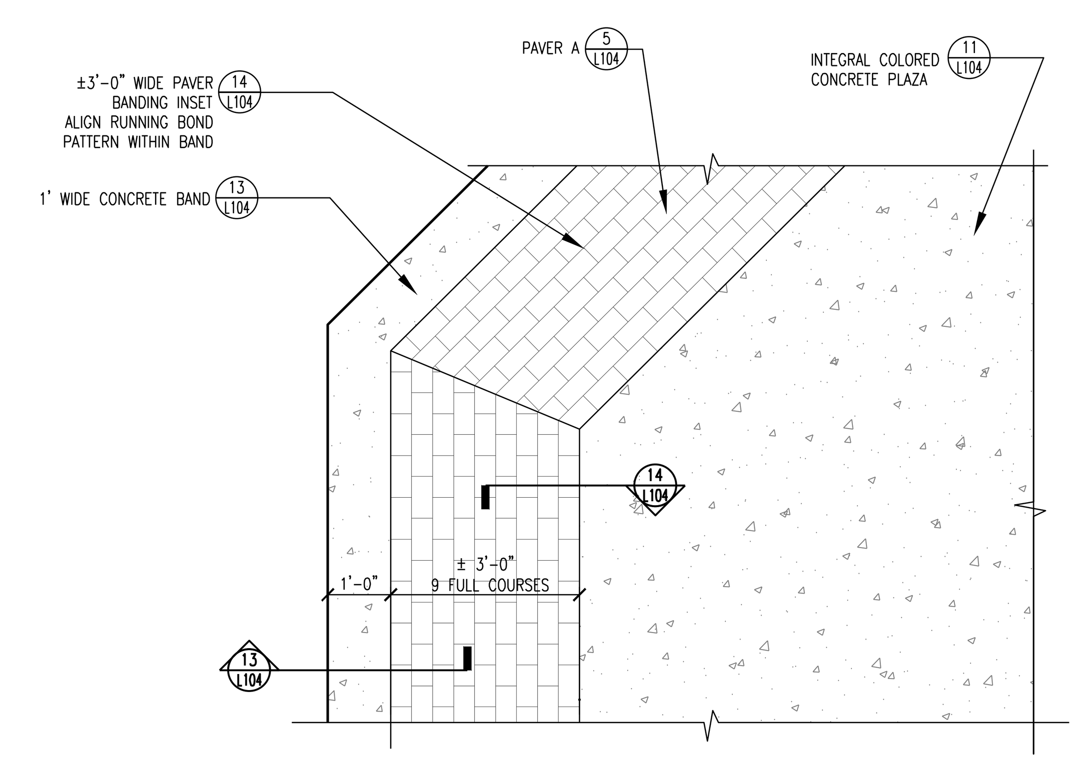

6 MUSIC AND ARTS PLAZA DETAIL

NOT TO SCALE

OWNER:
THE COLLEGE OF NEW JERSEY
2000 PENNINGTON ROAD
EWING, NJ 08628
(609) 771-3315

SITE / CIVIL:
MATRIX NEW WORLD
442 STATE ROUTE 35, 2ND FLOOR
EATONTOWN, NJ 07724
(732) 588-2999

ELECTRICAL:
KELTER & GILLIGO
14 WASHINGTON RD.
PRINCETON JCT. NJ 08550
(609) 799-8336

SUBMISSIONS

NO.	DATE	DESCRIPTION
1	3/14/14	100% CD SUBMISSION

REVISIONS

LANDSCAPE ARCHITECT NJ LICENSE #AS00612
MICHAEL F. SULLIVAN
DATE 03/14/14

CAMPUS TOWN SIDEWALKS THE COLLEGE OF NEW JERSEY

EWING, NJ

DATE:	3/14/14
SCALE:	AS NOTED
DRAWN BY:	GKV/CK
CHECKED BY:	MFS

SHEET TITLE:
Plan Enlargements and Details

DRAWING NO.:
L102

CCH PROJECT NO: 9013

12314031210243 21
gvaughn N:\9000\9013_TCNJ Campus Town Sidewalks\DWGS\2-Sheets\LA102.dwg

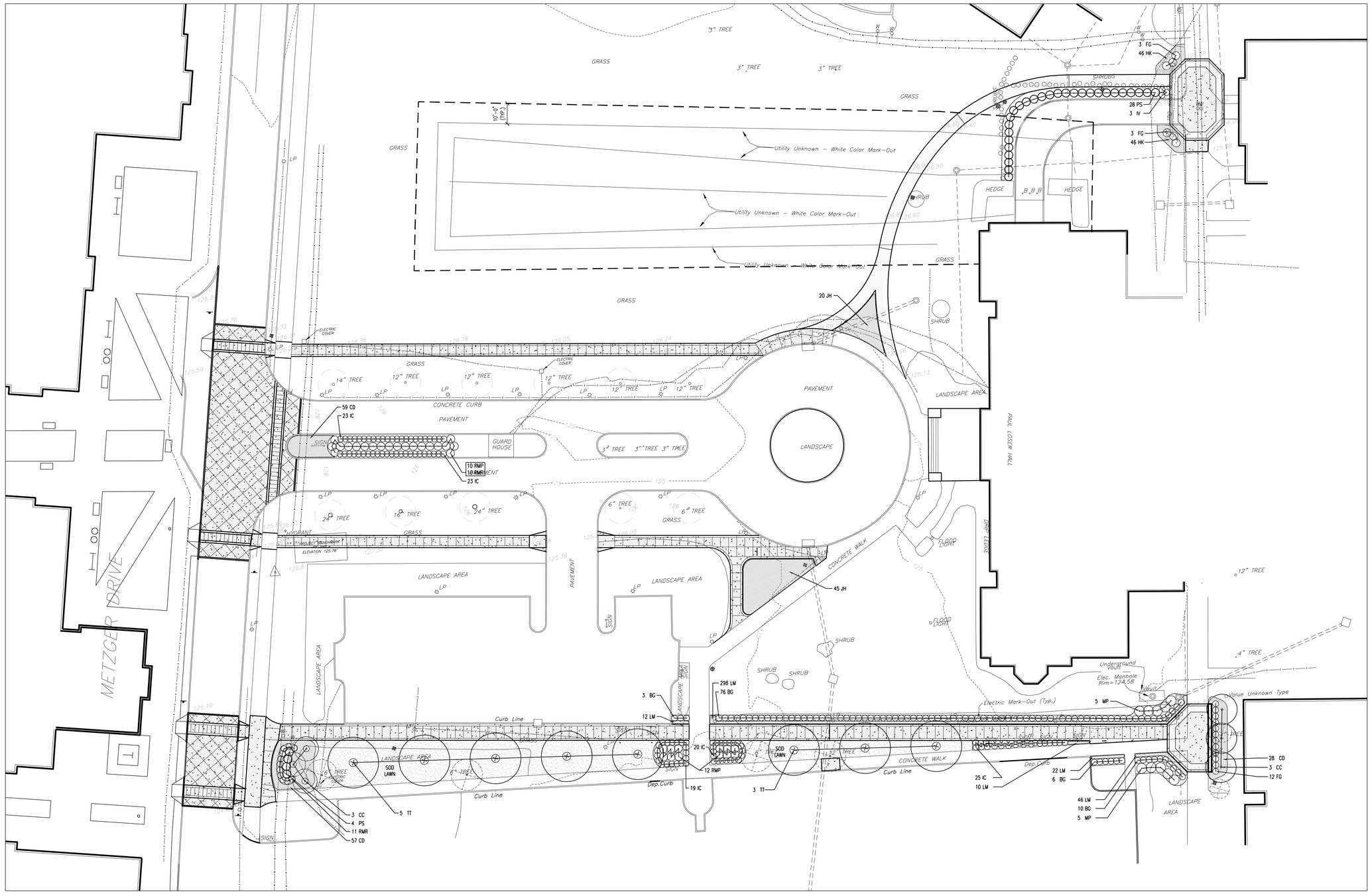

1 PLANTING PLAN

PLANTING SCHEDULE

KEY	QTY	BOTANICAL NAME	COMMON NAME	CAL	HT.	ROOT	COMMENTS
DECIDUOUS TREES							
CC	**6**	Cercis canadensis	Eastern Redbud	--	8' - 10'	B&B	Multi-stem Specimen
TT	**8**	Tilia Tomentosa 'Green Mountain'	Green Mountain Silver Linden	3" - 3.5"'	14' - 16'	B&B	Full Specimen
SHRUBS							
BM	**95**	Buxus x 'Green Mountain'	Green Mountain Boxwood	--	15"-18"	#3 Cont.	FULL PLANTS, Spacing as shown
CD	**144**	Cotoneaster dammeri	Bearberry Cotoneaster	--	10"-12"	#3 Cont.	FULL PLANTS, 36" O.C. Spacing
FG	**18**	Fotergilla gardenii 'Mt. Airy'	Mount Airy Dwarf Fothergilla	--	30"-36"	#5 Cont.	FULL PLANTS, Spacing as shown
IC	**110**	Ilex Crenata 'Hellen'	Hellen Japanese Holly	--	15"-18"	#3 Cont.	FULL PLANTS, Spacing as shown
IV	**3**	Itea virginica 'Henry's Garnet'	Henry's Garnet Virginia Sweetspire	--	18"-24"	#3 Cont.	FULL PLANTS, Spacing as shown
JH	**65**	Juniperus horizontalis plumosa 'Youngstown'	Compact Andorra Juniper	--	18"-24"	#3 Cont.	FULL PLANTS, 48" O.C. Spacing
MP	**10**	Myrica pennsylvanica	Northern Bayberry	--	3'-4'	B&B	FULL PLANTS, Spacing as shown
PS	**32**	Prunus laurocerasus 'Schipkaensis'	Schipka Cherry Laurael	--	30"-36"	B&B	FULL PLANTS, Spacing as shown
RMR	**21**	Rosa 'Meineble'	Red Meidiland Rose	--	18"-24"	#3 Cont.	FULL PLANTS, Spacing as shown
RMP	**22**	Rosa 'Melpoque'	Pink Meidiland Rose	--	18"-24"	#3 Cont.	FULL PLANTS, Spacing as shown
GROUNDCOVER, PLUGS AND ORNAMENTAL GRASSES							
HMA	**92**	Hakonechloa macra 'Aureola'	Golden Japanese forest grass	--	6" - 12"	#1 Cont.	FULL PLANTS, 18" O.C. Triangular Spacing
LM	**388**	Liriope Muscari	Lillyturf	--	6" - 12"	#1 Cont.	FULL PLANTS, 12" O.C. Spacing

2 PLANTING SCHEDULE

Clarke Caton Hintz
Architecture
Planning
Landscape Architecture
100 Barrack Street
Trenton, NJ 08608
tel: (609) 883-8383
fax: (609) 883-4044
www.clarkecatonhintz.com

Drawings Copyright ©2012 Clarke Caton Hintz, PC

OWNER:
THE COLLEGE OF NEW JERSEY
2000 PENNINGTON ROAD
EWING, NJ 08628
(609) 771-3315

SITE / CIVIL:
MATRIX NEW WORLD
442 STATE ROUTE 35, 2ND FLOOR
EATONTOWN, NJ 07724
(732) 588-2999

ELECTRICAL:
KELTER & GILLIGO
14 WASHINGTON RD.
PRINCETON JCT, NJ 08550
(609) 799-8336

SUBMISSIONS

NO.	DATE	DESCRIPTION
1	3/14/14	100% CD SUBMISSION

REVISIONS

LANDSCAPE ARCHITECT
NJ LICENSE #AS006612
MICHAEL F. SULLIVAN
DATE: 03/14/14

CAMPUS TOWN SIDEWALKS
THE COLLEGE OF NEW JERSEY
EWING, NJ

DATE:	3/14/2014
SCALE:	AS NOTED
DRAWN BY:	GKV
CHECKED BY:	MFS

SHEET TITLE:
PLANTING PLAN

DRAWING NO.:
L103

CCH PROJECT NO: 9013

12314031210161321
gvaughn N:\9000\9013_TCNJ_Campus Town Sidewalks\DWGS\2-Sheets\LA103.dwg

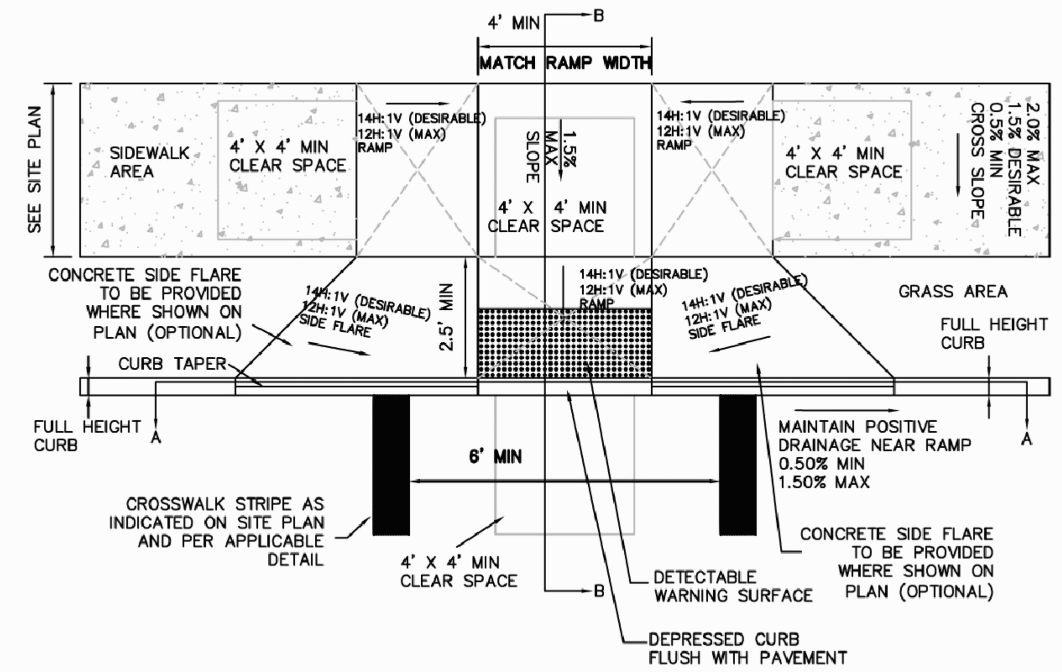

TYPICAL PERPENDICULAR CURB RAMP
N.T.S.

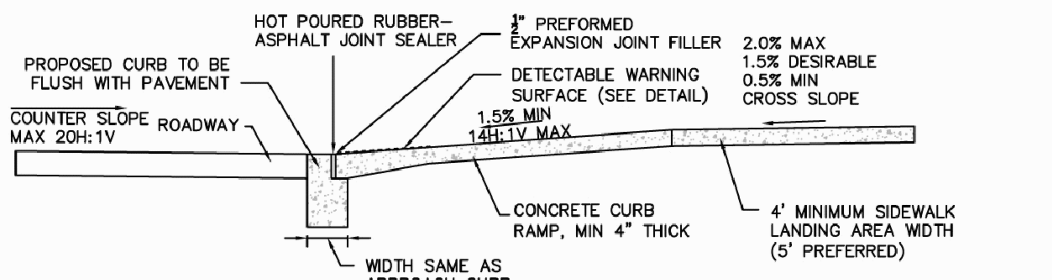

CURB RAMP SECTION B–B
N.T.S.

CURB RAMP NOTES:
1. THE CONTRACTOR SHALL PREPARE SHOP DRAWINGS OF EACH CURB RAMP FOR SUBMISSION AND APPROVAL OF THE UNDERSIGNED PROFESSIONAL AND THE MUNICIPAL, COUNTY, STATE OR OTHER AGENCY'S ENGINEER HAVING JURISDICTION.
2. LANDING AREA, APPROACH SIDEWALK TRANSITIONS AND CURB RAMP SHALL BE KEPT CLEAR OF OBSTRUCTIONS.
3. CURB (DROPPED CURB) GUTTER-LINE TO BE FLUSH WITH ROADWAY PAVEMENT.
4. CROSSWALKS AND PAVEMENT MARKINGS TO BE INSTALLED AS DENOTED ON SITE PLAN.
5. MAXIMUM RAMP SLOPE MAY BE 12H:1V UPON APPROVAL OF ENGINEER. RAMP SLOPES SHOWN ARE THE PREFERRED SLOPE. SIDE FLARE SLOPES MAY BE 10H:1V UPON THE APPROVAL OF THE ENGINEER.
6. MINIMUM RAMP CROSS-SLOPE SHALL BE 0.50% OR THE MAXIMUM RAMP CROSS-SLOPE MAY BE 2.00% UPON APPROVAL OF THE ENGINEER. CROSS-SLOPES SHOWN IN THE DETAILS ARE THE PREFERRED SLOPE MAINTAIN A LEVEL OF CONSTRUCTION TOLERANCE.
7. ACCESSIBLE RAMPS SHALL BE INSTALLED PURSUANT WITH THE CURRENT UNITED STATES ACCESS BOARD ACCESSIBILITY GUIDELINES FOR PEDESTRIAN FACILITIES AND THE ADA STANDARDS FOR ACCESSIBLE DESIGN AS PUBLISHED BY THE UNITED STATES DEPARTMENT OF JUSTICE AND OTHER APPLICABLE LOCAL AND STATE STANDARDS IN EFFECT AT THE DATE OF CONSTRUCTION.
8. DEVIATION FROM THE CURB RAMP DETAIL REQUIRES THE WRITTEN APPROVAL OF THE UNDERSIGNED PROFESSIONAL AND THE MUNICIPAL, COUNTY, STATE OR OTHER AGENCY'S ENGINEER HAVING JURISDICTION.
9. THE RAMP SURFACE SHALL BE A NON-SLIP, HAND BROOMED FINAL FINISH OF CONCRETE SURFACES.
10. CONCRETE EXPANSIONS JOINTS SHALL BE FIRM SURFACES, WITH CONCRETE EDGES 1/4" BEVELED, AND WITH THE JOINT SURFACE NOT MORE THAN 1/4" BELOW THE ADJOINING CONCRETE SURFACE.
11. CURB RAMPS MUST BE WHOLLY CONTAINED WITHIN THE CROSSWALK CROSSING.
12. THE CLEAR SPACE SHALL BE INCREASED TO 5 FEET WHERE THE TURNING SPACE IS CONSTRAINED AT THE BACK OF THE SIDEWALK.
13. ON CURVED CROSSWALKS, THE MAXIMUM SEPARATION BETWEEN THE CURB AND DETECTABLE WARNING SURFACE SHALL NOT EXCEED 5 FEET. THE MAXIMUM SEPARATION AREA MAY BE WITHIN THE 4' BY 4' CLEAR ZONE. A SHOP DRAWING SHALL BE SUBMITTED PRIOR TO CONSTRUCTION FOR APPROVAL.

CURB RAMP NOTES

1 CURB RAMP — NOT TO SCALE

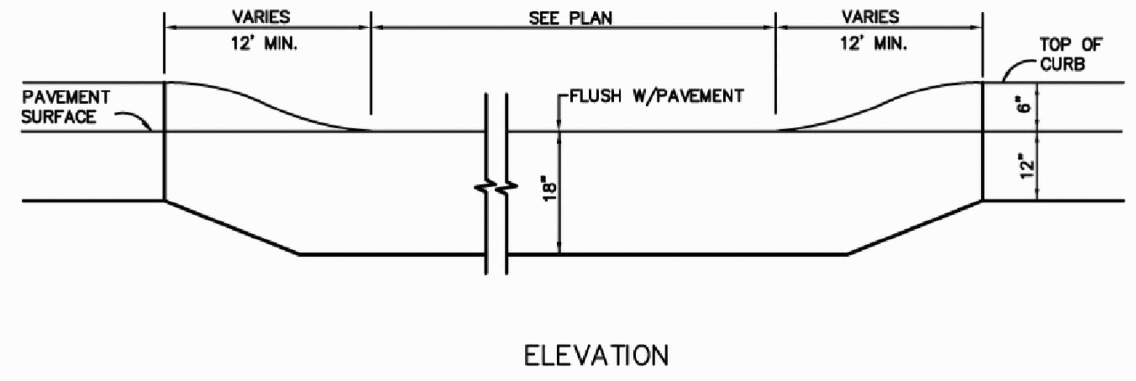

2 DEPRESSED CURB DETAIL — NOT TO SCALE

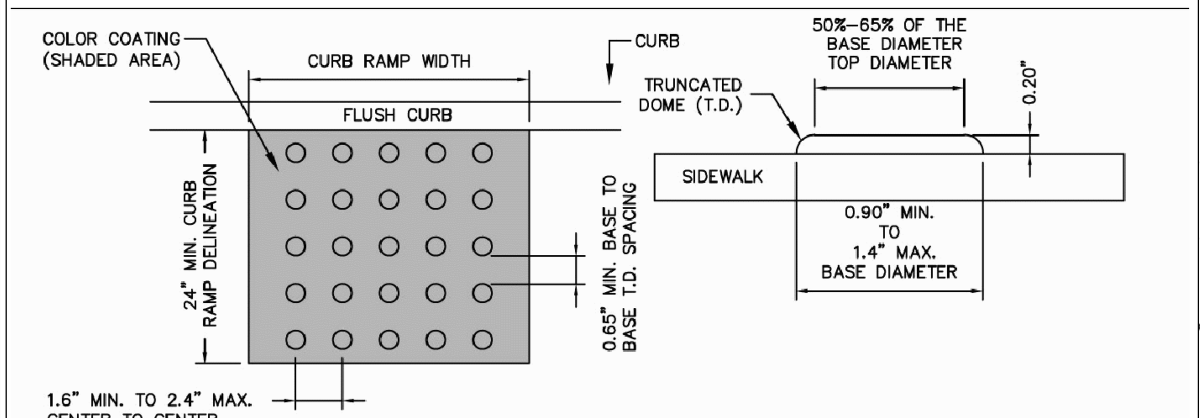

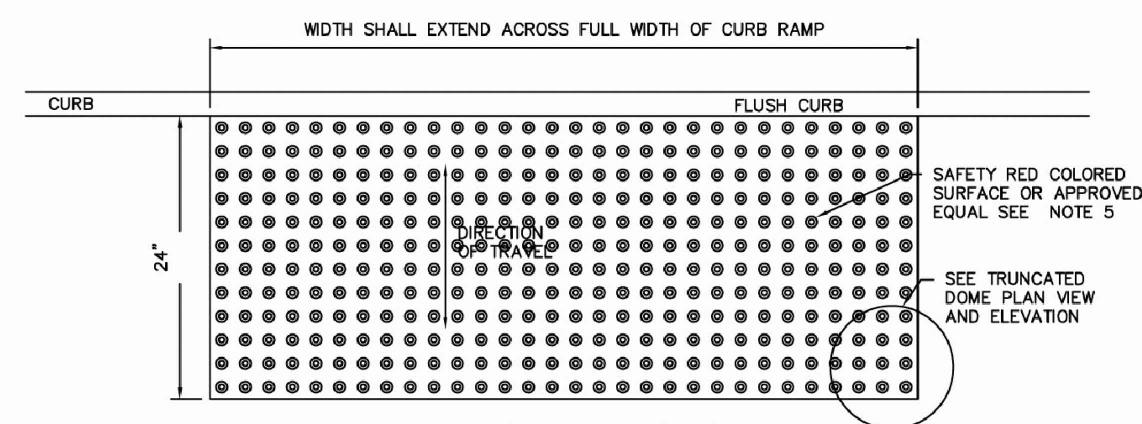

DETECTABLE WARNING SURFACE
N.T.S.

NOTES:
1. THE DETECTABLE WARNING SURFACE SHALL BE MANUFACTURED MATS THAT ARE EMBEDDED AND CAST-IN-PLACE IN THE CONCRETE.
2. THE CONTRACTOR SHALL SUBMIT TO THE ENGINEER A SHOP DRAWING OF THE DETECTABLE WARNING SURFACE PRIOR TO CONSTRUCTION FOR APPROVAL.
3. THE CONTRACTOR SHALL PROVIDE A MANUFACTURER CERTIFICATION THAT THE DETECTABLE WARNING SURFACE COMPLIES WITH THE CURRENT ADA STANDARDS FOR ACCESSIBLE DESIGN AS PUBLISHED BY THE DEPARTMENT OF JUSTICE AND THE ADA STANDARDS AS SUPPORTED BY THE UNITED STATES ACCESS BOARD, AND THE STATE AND/OR LOCAL ADA STANDARDS.
4. SAFETY RED SHALL BE APPROVED BY THE LOCAL JURISDICTION PRIOR TO INSTALLATION. DETECTABLE WARNING SURFACES SHALL CONTRAST VISUALLY WITH ADJACENT WALKING SURFACES EITHER LIGHT-ON-DARK, OR DARK-ON-LIGHT. ALTERNATIVE COLOR MAY BE USED PROVIDED SUCH COLOR COMPLIES WITH CURRENT ADA STANDARDS.
5. DETECTABLE WARNINGS SHALL CONSIST OF A SURFACE OF TRUNCATED DOMES AND SHALL COMPLY DETECTABLE WARNINGS.
6. TRUNCATED DOMES IN A DETECTABLE WARNING SURFACE SHALL HAVE A BASE DIAMETER OF 0.9 INCH (23 mm) MINIMUM AND 1.4 INCHES (36 mm) MAXIMUM, A TOP DIAMETER OF 50 PERCENT OF THE BASE DIAMETER MINIMUM TO 65 PERCENT OF THE BASE DIAMETER MAXIMUM, AND A HEIGHT OF 0.2 INCH (5.1 mm).
7. TRUNCATED DOMES IN DETECTABLE WARNING SURFACE SHALL HAVE A CENTER-TO-CENTER SPACING OF 1.6 INCHES (41 mm) MINIMUM AND 2.4 INCHES (61 mm) MAXIMUM, AND A BASE-TO-BASE SPACING OF 0.65 INCH (17 mm) MINIMUM, MEASURED BETWEEN THEY MOST ADJACENT DOMES ON A SQUARE GRID.

3 DETECTABLE WARNING PAVERS — NOT TO SCALE

LUMINAIRE BY ARCHITECTURAL AREA LIGHTING OR EQUIVALENT
MODEL: CLL – CIVIC LANTERN

A: CLL–PER–150PSMH–DBZ–ASY
150 WATT PULSE START METAL HALIDE
ASYMMETRICAL DISTRIBUTION

B: CLL–PER–150PSMH–DBZ
150WATT PULSE START METAL HALIDE

EPA: 2.10
FIXTURE COLOR: DARK BRONZE

POLE: DB12– DECORATIVE POLE BY ARCHITECTURAL AREA LIGHTING OR APPROVED EQUAL
4" FLUTED DECORATIVE BASE
MODEL NUMBER: DB12–4F14–188–14
POLE TO BE CUT TO 12'-6" HEIGHT

POLE EPA AT 100MPH: 9.6
POLE COLOR: DARK BRONZE

NOTE: SEE ELECTRICAL DRAWINGS FOR WIRING, CONTROL AND ELECTRICAL SPECIFICATIONS

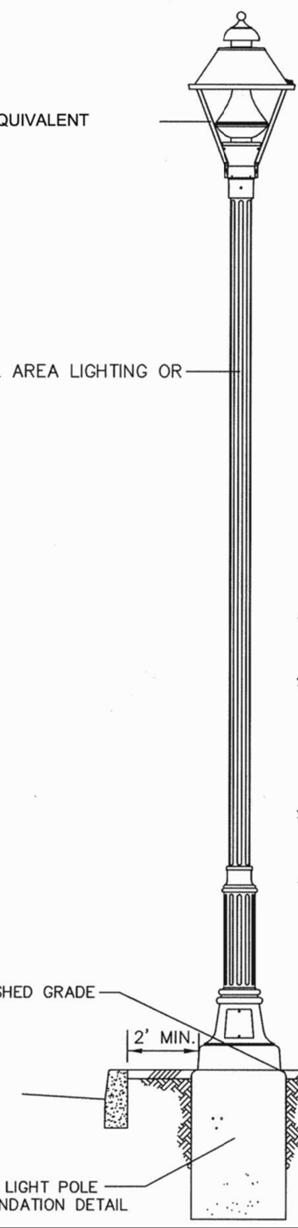

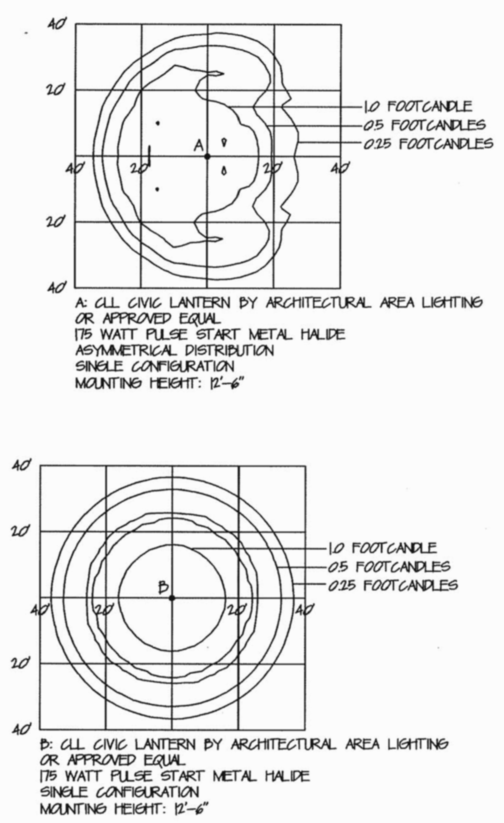

4 LUMINAIRE AND POLE DETAIL — NOT TO SCALE

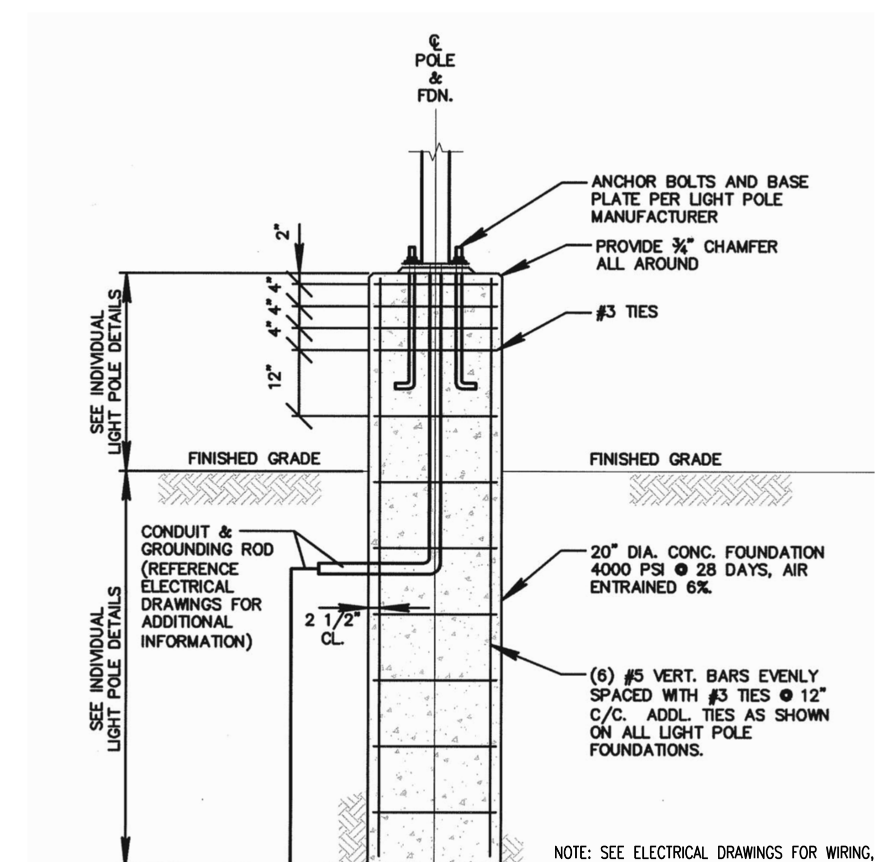

6 LIGHT FOOTING DETAIL — SCALE: 1" = 10'-0"

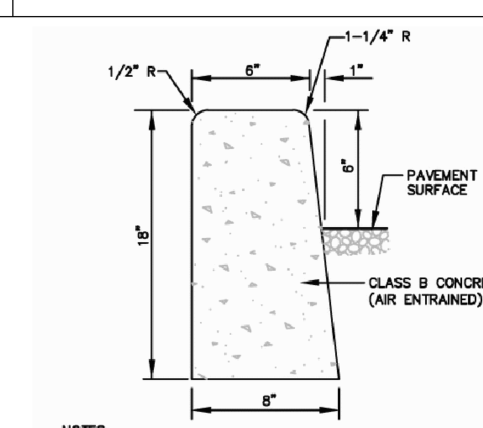

NOTES:
1. CONCRETE TO TEST 4500 POUNDS PER SQUARE INCH MINIMUM ON 28 DAY COMPRESSIVE TEST.
2. ALL CONCRETE IS TO BE PROPERLY CURED USING A CURING COMPOUND, SALT HAY, BURLAP OR OTHER METHOD ACCEPTABLE TO ENGINEER.
3. CONCRETE SLUMP TO BE A MAXIMUM OF 3 INCHES.
4. STEEL SEPARATORS SHALL BE USED WITH ALL THE FORMS TO CREATE A CONSTRUCTION JOINT EVERY 10 FEET ALONG THE CURB.
5. A HALF INCH EXPANSION JOINT OF A NON-EXTRUDABLE, FIBROUS, BITUMASTIC MATERIAL SHALL BE PLACED ON 20 FT. CENTERS MAXIMUM.
6. CONTRACTOR TO NOTIFY ENGINEER TWO DAYS PRIOR TO POURING.

ONSITE CONCRETE CURB DETAIL
N.T.S.

16 CONCRETE CURB — NOT TO SCALE

CROSSWALK PEDESTRIAN YIELD SIGN
N.T.S.

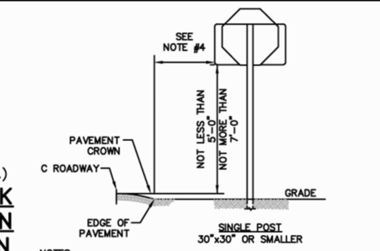

NOTES:
1. ALL POSTS SHALL BE OF ADEQUATE LENGHT TO MEET THE REQUIREMENTS FOR ERECTION, AS STATED IN THE CURRENT MANUAL ON "UNIFORM TRAFFIC CONTROL DEVICES" FOR STREETS AND HIGHWAYS.
2. ALL POSTS SHALL BE EMBEDDED 4'-2" MINIMUM.
3. POSTS MAY BE STEEL, ALUMINUM OR 2 PIECE U-POSTS IN CONFORMANCE WITH CURRENT A.S.T.M. SPECIFICATION A123.
4. IN AREAS WITHOUT CURBING, THE OUTER EDGE OF SIGN TO BE 6'-0" MINIMUM TO 12'-0" MAXIMUM FROM EDGE OF SHOULDER, AS DIRECTED.

SINGLE POST MOUNTING
N.T.S.

5 PEDESTRIAN YIELD SIGN — NOT TO SCALE

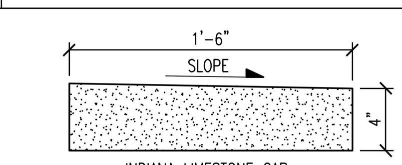

BASIS OF DESIGN
INDIANA LIMESTONE, 4" HT.,
4' STANDARD LENGTHS.
OR EQUIVALENT

INSTALL CAP AS DETAILED IN 15/L104.
JOINT MORTAR COLOR TO MATCH CAP.
CONTRACTOR SUBMIT FULL SIZE SAMPLE FOR REVIEW AND APPROVAL

17 LIMESTONE SEAT WALL CAP — NOT TO SCALE

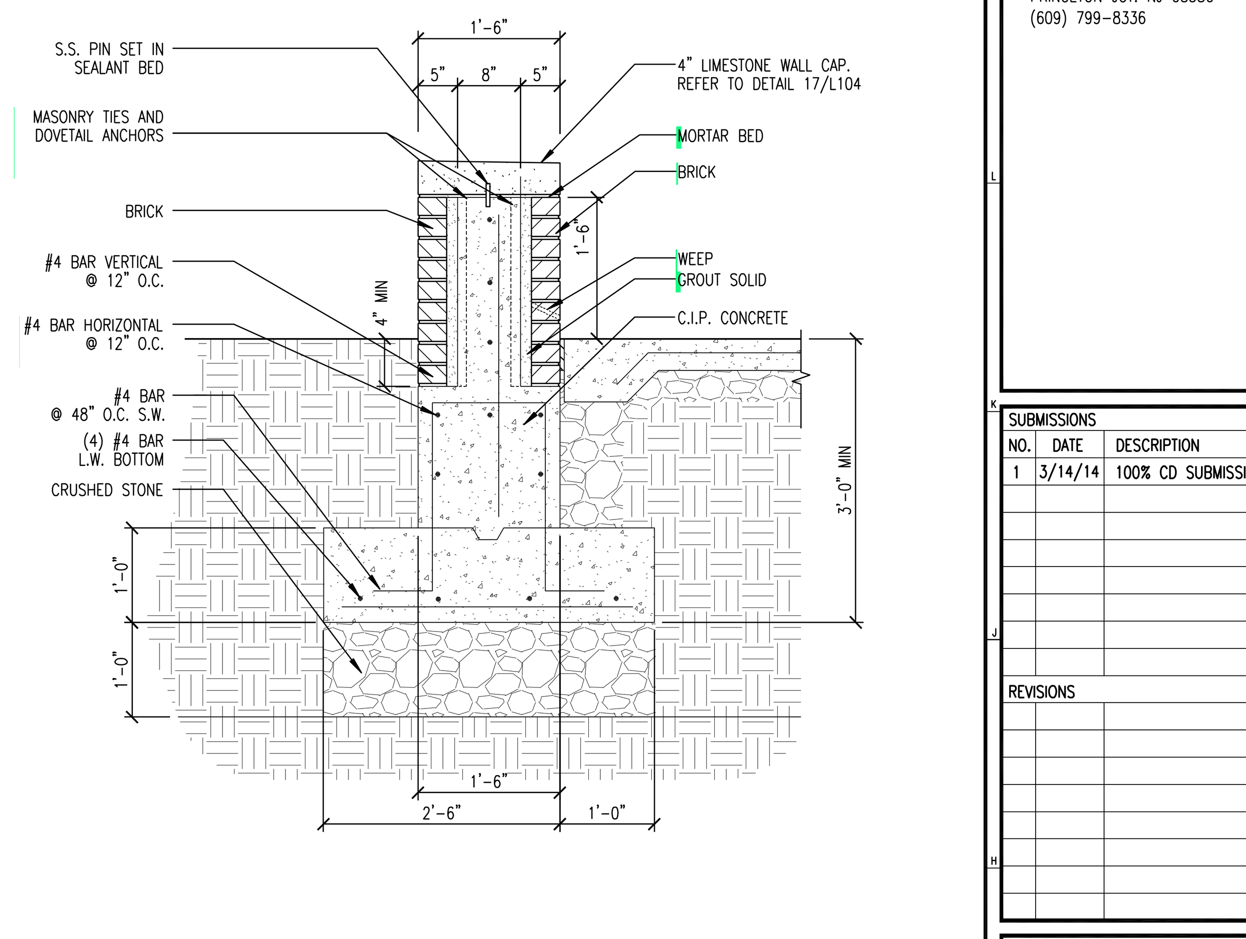

15 BRICK SEAT WALL SECTION — SCALE: 3/4" = 1'-0"

BASIS OF DESIGN:

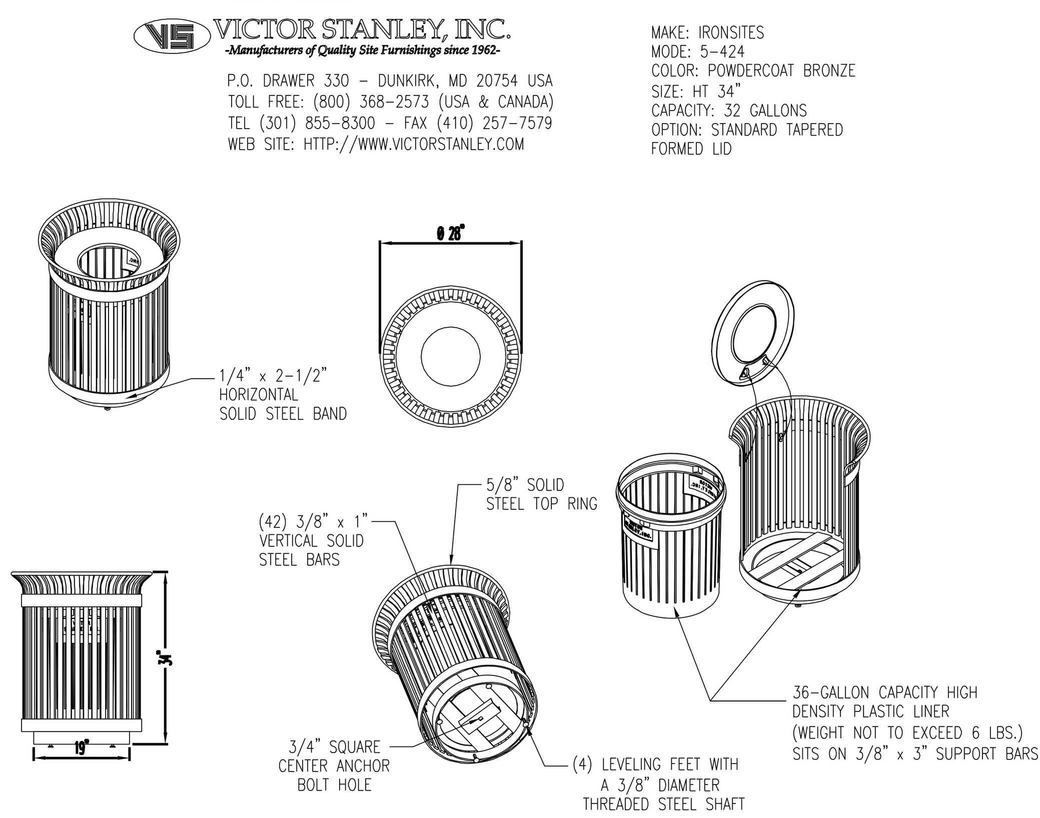

P.O. DRAWER 330 – DUNKIRK, MD 20754 USA
TOLL FREE: (800) 368-2573 (USA & CANADA)
TEL (301) 855-8300 – FAX (410) 257-7579
WEB SITE: HTTP://WWW.VICTORSTANLEY.COM

MAKE: IRONSITES
MODE: 5–424
COLOR: POWDERCOAT BRONZE
SIZE: HT 34"
CAPACITY: 32 GALLONS
OPTION: STANDARD TAPERED FORMED LID

LIDS
STANDARD TAPERED FORMED LID (AS SHOWN).
ONE LID TO BE MARKED "RECYCLING ONLY"

SECURITY
LID IS SECURED WITH VINYL COATED GALVANIZED STEEL AIRCRAFT CABLE. CABLE IS LOOPED AROUND WELDED IN PLACE ATTACHMENT BRACKETS AND CRIMPED IN PLACE. AVAILABLE WITH OPTIONAL MOUNT WITH 3 IN-LINE ANCHOR HOLES AND OPTIONAL BOTTOM PLATE COVER.

NOTES:
1. **DRAWING IS FOR REFERENCE ONLY. TCNJ TO PURCHASE THE WASTE AND RECYCLING CONTAINERS FOR INSTALLATION BY THE CONTRACTOR. CONTRACTOR SHALL COORDINATE WITH THE COLLEGE AND INSTALL WITH ANCHOR BOLTS PER MANUFACTURER SPECIFICATIONS.**
2. ALL FABRICATED METAL COMPONENTS ARE STEEL SHOTBLASTED, ETCHED, PHOSPHATIZED, PREHEATED, AND ELECTROSTATICALLY POWDER-COATED WITH T.G.I.C. POLYESTER POWDER COATINGS. PRODUCTS ARE FULLY CLEANED AND PRETREATED, PREHEATED AND COATED WHILE HOT TO FILL CREVICES AND BUILD FILM COATING. COATED PARTS ARE THEN FULLY CURED TO COATING MANUFACTURER'S SPECIFICATIONS. THE THICKNESS OF THE RESULTING FINISH AVERAGES 8–10 MILS (200–250 MICRONS).
3. THIS VICTOR STANLEY, INC. PRODUCT MUST BE PERMANENTLY AFFIXED TO THE GROUND.
4. VICTOR STANLEY, INC., PLASTIC INNER LINERS ARE MOLDED ON TOOLING DESIGNED FOR AND OWNED BY VICTOR STANLEY, INC. THEY OFFER MAXIMUM CAPACITY AND STRENGTH WITH LIGHTWEIGHT CONSTRUCTION USING CRITICAL MOLDED RIBS, INTEGRAL HANDHOLDS, AND HIGH-STRENGTH MATERIALS. THIS MINIMIZES HANDLING DIFFICULTY AND FACILITATES EASY EMPTYING AND STORAGE WHILE AFFORDING LONG SERVICE LIFE.
5. ANCHOR BOLT NOT PROVIDED BY VICTOR STANLEY, INC.
6. FOR HIGH SALT ABUSIVE CLIMATES, HOT DIP GALVANIZING BEFORE POWDER COATING IS AVAILABLE. SEE WRITTEN SPECIFICATIONS FOR DETAILS.
7. ALL SPECIFICATIONS ARE SUBJECT TO CHANGE. CONTACT MANUFACTURER FOR DETAILS.
8. THIS PRODUCT IS SHIPPED FULLY ASSEMBLED.
9. TO BE ANCHORED IN CONCRETE WITH GALVANIZED CONCRETE ANCHOR. INSTALL PER MANUFACTURERS RECOMMENDATIONS.

7 TRASH RECEPTACLE - IRONSITES S-242

BASIS OF DESIGN:
ALUMINUM EDGE RESTRAINT:
AS MANUFACTURED BY:
PERMALOC CORP.
HOLLAND, MI
WWW.PERMALOC.COM
TEL: (616)399-9600
SIZE: 3/16" X 1⅝" W/ .210"
FINISH: (MF) MILL FINISH
OR EQUIVALENT

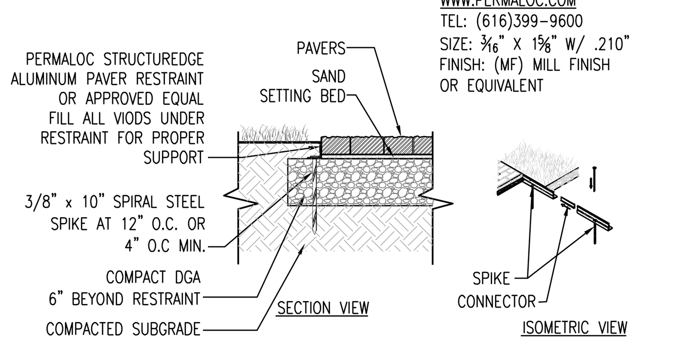

NOTE: APPLY ALUMINUM EDGE RESTRAINT TO ALL PAVER WALK INSTALLATION LOCATIONS

8 EDGE RESTRAINT — NOT TO SCALE

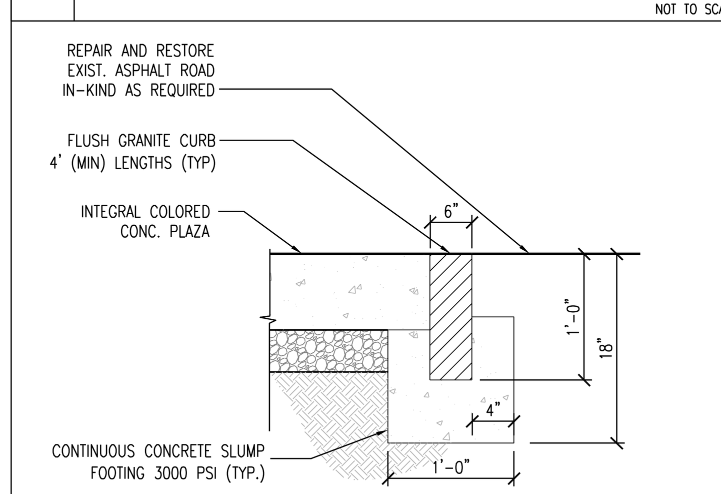

NOTES:
1. FLUSH GRANITE CURB: CONTRACTOR TO SUBMIT SAMPLES OF CURB AND JOINT MORTAR FOR COLOR AND FINISH APPROVAL. COLOR OF GRANITE AND MORTAR TO BE SELECTED BY ARCHITECT FROM MANUFACTURERS FULL RANGE.
2. MIN. 6' LENGTHS. CUT ENDS TO ENSURE TIGHT FIT TO METZGER DRIVE CURB
3. COLOR: CLASSIC GRAY GRANITE, STANDARD TOP FINISH, SAWN SIDES. OR EQUIVALENT
4. N.C. GRANITE CORP.: P.O. BOX 151 MOUNT AIRY, NC 27030 TEL: (336)786-5141 OR EQUIVALENT

9 GRANITE FLUSH CURB — NOT TO SCALE

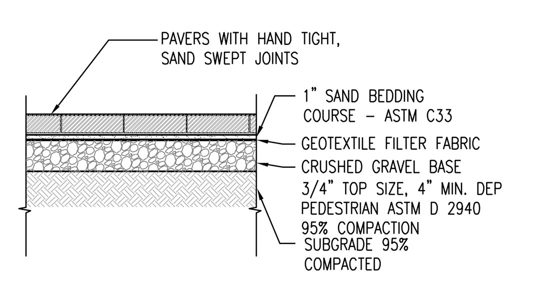

10 PAVER SECTION — NOT TO SCALE

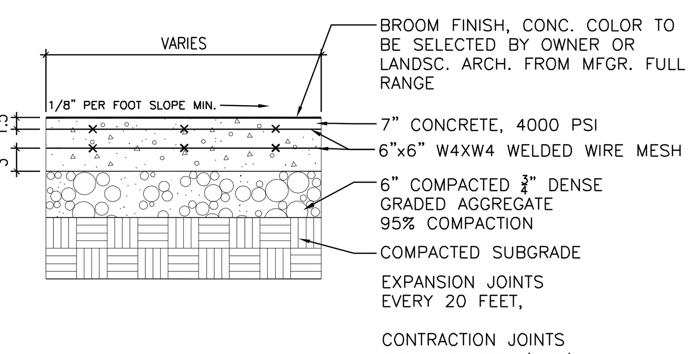

11 HEAVY DUTY CONCRETE — NOT TO SCALE

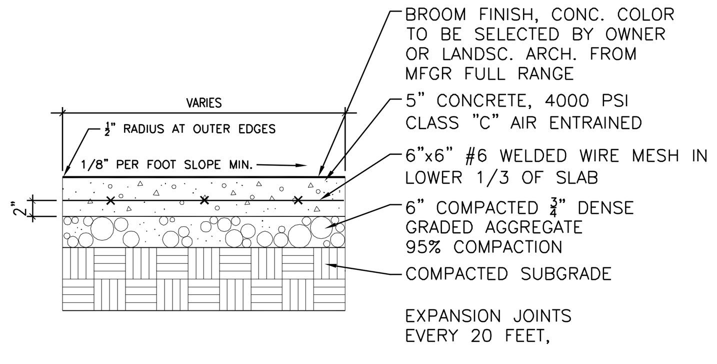

12 LIGHT DUTY CONCRETE PAVEMENT — NOT TO SCALE

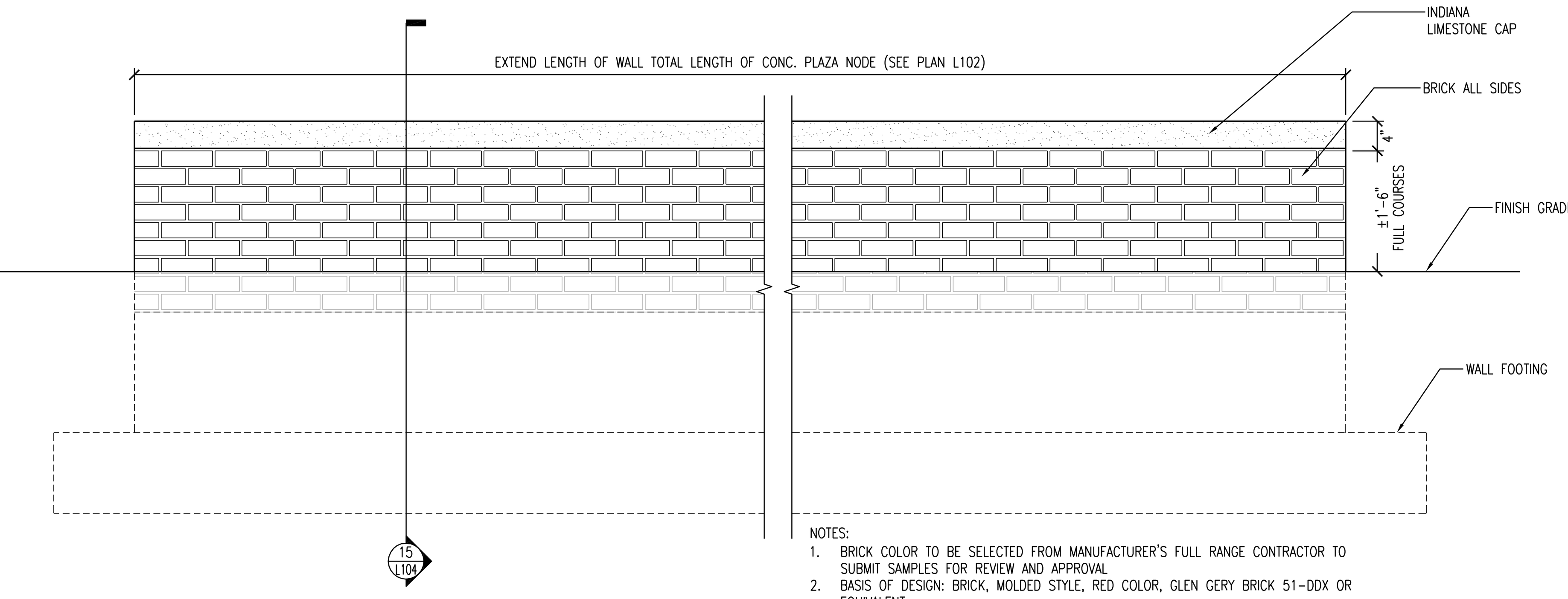

NOTES:
1. BRICK COLOR TO BE SELECTED FROM MANUFACTURER'S FULL RANGE CONTRACTOR TO SUBMIT SAMPLES FOR REVIEW AND APPROVAL
2. BASIS OF DESIGN: BRICK, MOLDED STYLE, RED COLOR, GLEN GERY BRICK 51-DDX OR EQUIVALENT

16 BRICK SEAT WALL ELEVATION — NOT TO SCALE

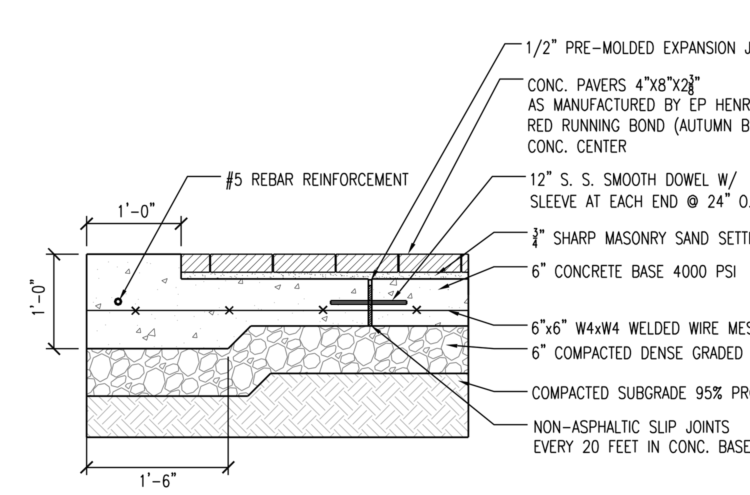

13 UNIT CONC. PAVEMENT AND CONC. BAND

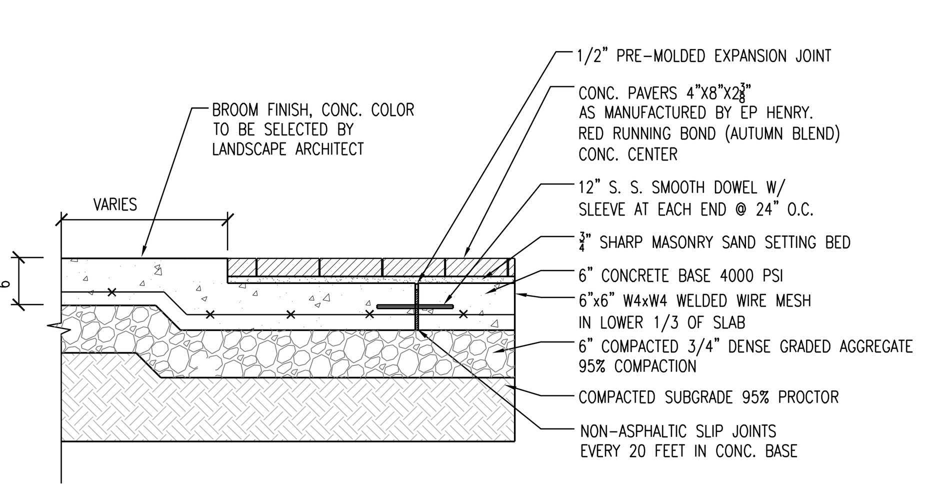

14 UNIT CONC. PAVEMENT AND CONC. WALK — NOT TO SCALE

Clarke Caton Hintz
Architecture
Planning
Landscape Architecture
100 Barrack Street
Trenton, NJ 08608
tel: (609) 883-8383
fax: (609) 883 4044
www.clarkecatonhintz.com

Drawings Copyright ©2012 Clarke Caton Hintz, PC

OWNER:
THE COLLEGE OF NEW JERSEY
2000 PENNINGTON ROAD
EWING, NJ 08628
(609) 771-3315

SITE / CIVIL:
MATRIX NEW WORLD
442 STATE ROUTE 35, 2ND FLOOR
EATONTOWN, NJ 07724
(732) 588-2999

ELECTRICAL:
KELTER & GILLIGO
14 WASHINGTON RD.
PRINCETON JCT. NJ 08550
(609) 799-8336

SUBMISSIONS

NO.	DATE	DESCRIPTION
1	3/14/14	100% CD SUBMISSION

REVISIONS

LANDSCAPE ARCHITECT NJ LICENSE #AS00612 — MICHAEL F. SULLIVAN — DATE 03/14/14

CAMPUS TOWN SIDEWALKS
THE COLLEGE OF NEW JERSEY
EWING, NJ

DATE:	3/14/14
SCALE:	AS NOTED
DRAWN BY:	GKV/CK
CHECKED BY:	MFS

SHEET TITLE:
DETAILS

DRAWING NO.:
L104

CCH PROJECT NO: 9013

12314031210 17321 gvoughn N:\9000\9013_TCNJ Campus Town Sidewalks\DWGS\2-Sheets\LA104.dwg

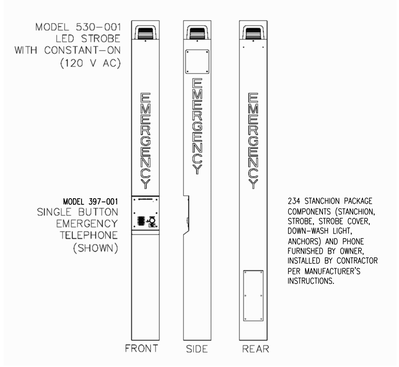

MFGR: GAI-TRONICS
WEB: HTTP://WWW.GAITRONICS.COM/TELEPHONES/STANCHIONS_ENCL_ACCESS/234.HTM
MODEL: FREE STANDING STANCHION - 234
COLOR: STANDARD BRONZE
NOTES:
1. INSTALL PER MANUFACTURERS WRITTEN ASSEMBLY AND INSTALLATION SPECIFICATIONS.
2. DETAILS ARE FOR REFERENCE ONLY. SEE PUBLICATION 42004-194M FROM GAI-TRONICS FOR FULL SPECIFICATIONS AND INSTALLATION INSTRUCTIONS.
3. SEE ELECTRICAL DRAWINGS FOR ELECTRICAL AND TELEPHONE WIRING AND CONNECTION AND SPECIFICATIONS

1 EMERGENCY PHONE POLE — NOT TO SCALE

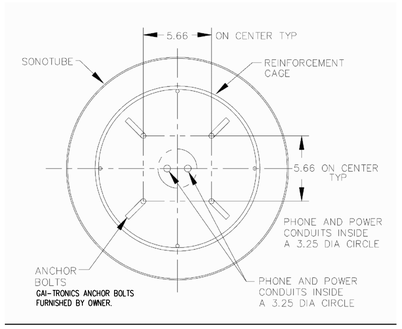

NOTES:
1. INSTALL PER MANUFACTURERS WRITTEN ASSEMBLY AND INSTALLATION SPECIFICATIONS.
2. DETAILS ARE FOR REFERENCE ONLY. SEE PUBLICATION 42004-194M FROM GAI-TRONICS FOR FULL SPECIFICATIONS AND INSTALLATION INSTRUCTIONS.
3. SEE ELECTRICAL DRAWINGS FOR ELECTRICAL AND TELEPHONE WIRING AND CONNECTION AND SPECIFICATIONS

2 EMERGENCY PHONE POLE - BOLT CIRCLE PLAN — NOT TO SCALE

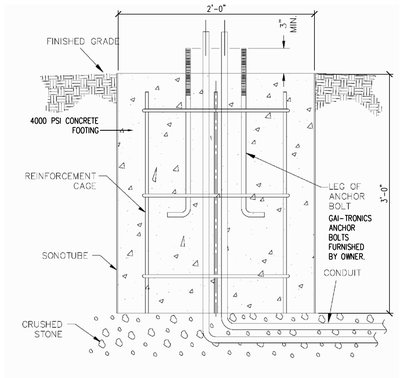

NOTES:
1. INSTALL PER MANUFACTURERS WRITTEN ASSEMBLY AND INSTALLATION SPECIFICATIONS.
2. DETAILS ARE FOR REFERENCE ONLY. SEE PUBLICATION 42004-194M FROM GAI-TRONICS FOR FULL SPECIFICATIONS AND INSTALLATION INSTRUCTIONS.
3. SEE ELECTRICAL DRAWINGS FOR ELECTRICAL AND TELEPHONE WIRING AND CONNECTION AND SPECIFICATIONS

3 EMERGENCY PHONE POLE FOUNDATION — NOT TO SCALE

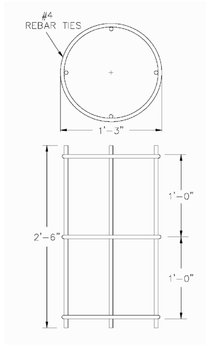

NOTES:
1. INSTALL PER MANUFACTURERS WRITTEN ASSEMBLY AND INSTALLATION SPECIFICATIONS.
2. DETAILS ARE FOR REFERENCE ONLY. SEE PUBLICATION 42004-194M FROM GAI-TRONICS FOR FULL SPECIFICATIONS AND INSTALLATION INSTRUCTIONS.
3. SEE ELECTRICAL DRAWINGS FOR ELECTRICAL AND TELEPHONE WIRING AND CONNECTION AND SPECIFICATIONS

4 EMERGENCY PHONE POLE - REINFORCING — NOT TO SCALE

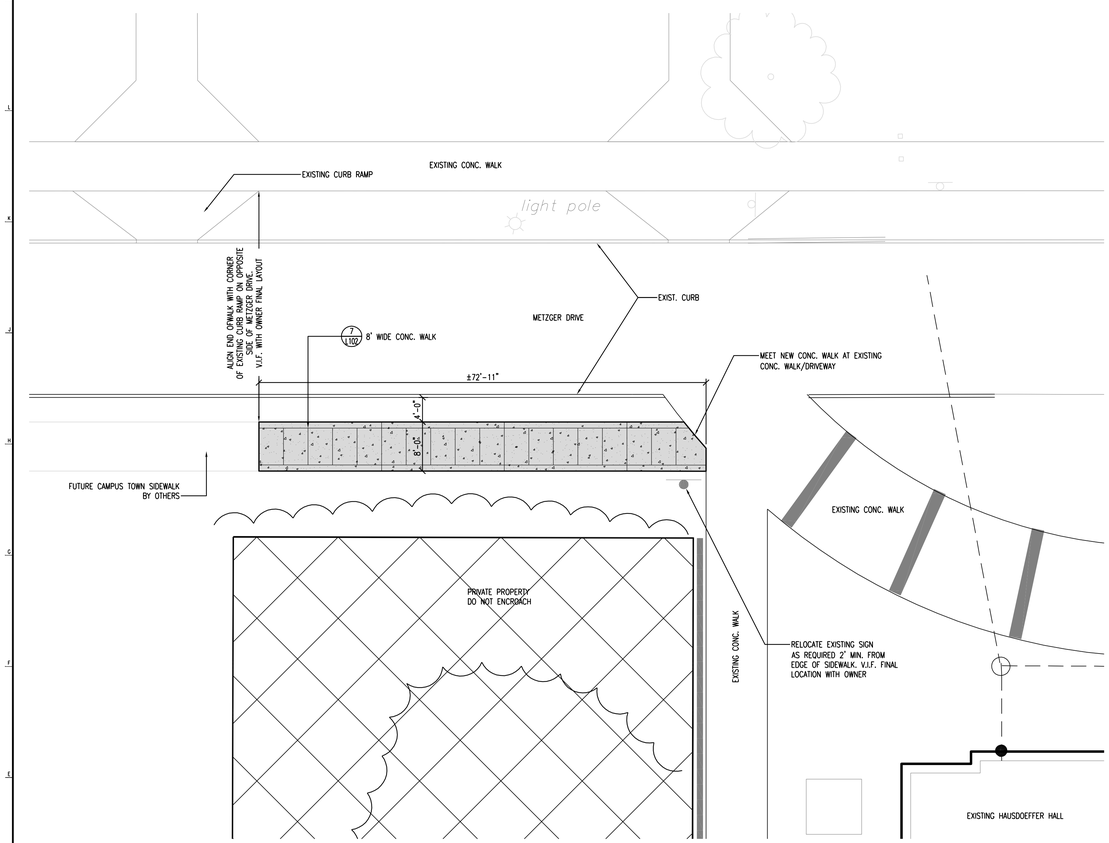

5 CONC. WALK ENLARGEMENT PLAN

0 10' 20'
SCALE: 1" = 10'-0"

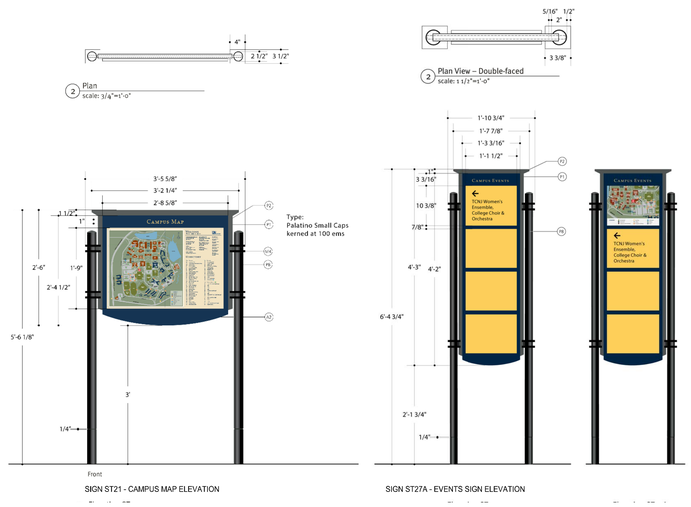

NOTES:
1. SIGNS ARE FOR REFERENCE ONLY. CONTRACTOR SHALL USE THESE DETAILS FOR SIGN LOCATIONS AND APPROXIMATE DISTANCE OF FOOTING LOCATIONS ONLY. CONTRACTOR SHALL USE FINAL FABRICATED SIGNS FOR FOOTING LOCATIONS IN FIELD.
2. CONTRACTOR SHALL INSTALL THE FOOTING, ALUMINUM TUBE AND MATCH PLATE AS SHOWN IN DETAIL 7/L104A. ALL SIGNS AND FOOTINGS DEPICTED SHALL BE INSTALLED AND COORDINATED WITHIN NEW CONCRETE WALK INSTALLATION.
3. COORDINATE WITH THE COLLEGE TO RECEIVE MOST CURRENT SIGNAGE CONSTRUCTION DOCUMENTS, FABRICATED SIGNAGE, ALUMINUM TUBE AND MATCHPLATE.
4. SEE TYPICAL MATCH PLATE MOUNTING DETAIL FOR FOOTING CONSTRUCTION AND NOTES.

6 SIGNAGE ELEVATIONS (FOR REFERENCE ONLY) — SCALE: 3/4" = 1'-0"

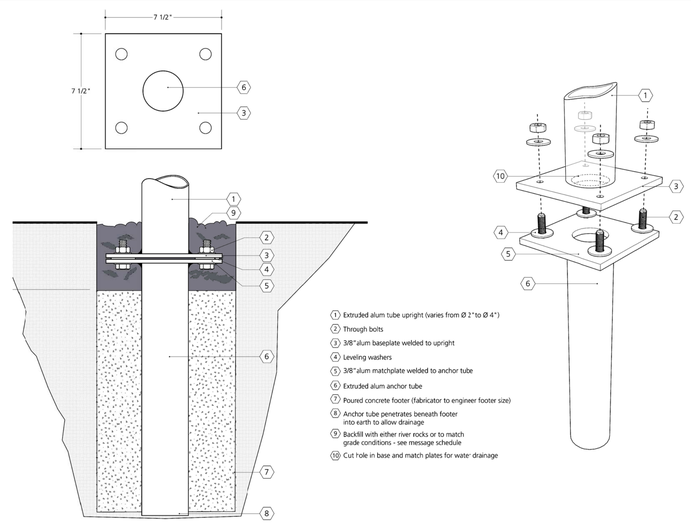

NOTES:
1. CONTRACTOR SHALL ONLY INSTALL THE FOOTING, ALUMINUM TUBE AND MATCH PLATE AS SHOWN ABOVE. SIGNAGE FABRICATOR/INSTALLER WILL FURNISH APPROPRIATE ALUMINUM TUBE UPRIGHT AND MATCH PLATE FOR INSTALLATION INTO THE FOOTING.
2. COORDINATE WITH THE COLLEGE AND SIGNAGE FABRICATOR/INSTALLER TO RECEIVE MOST CURRENT SIGNAGE CONSTRUCTION DOCUMENTS, FOOTER SIZE AND SIGNAGE MATERIALS.
3. AFTER THE FOOTING, ALUMINUM TUBE AND MATCHPLATE HAVE BEEN INSTALLED, THE SIGNAGE FABRICATOR/INSTALLER SHALL INSTALL THE SIGNS.
4. AFTER THE SIGNS ARE INSTALLED, CONCRETE SIDEWALK TO BE POURED AROUND THE SIGN UPRIGHTS. SIDEWALK TO BE INSTALLED ONLY AFTER SIGNAGE INSTALLATION OR AS DIRECTED BY THE COLLEGE.

7 TYPICAL MATCHPLATE DETAIL — NOT TO SCALE

Clarke Caton Hintz
Architecture
Planning
Landscape Architecture
100 Barrack Street
Trenton, NJ 08608
tel: (609) 883-8383
fax: (609) 883-4044
www.clarkecatonhintz.com

Drawings Copyright ©2012 Clarke Caton Hintz, PC

OWNER:
THE COLLEGE OF NEW JERSEY
2000 PENNINGTON ROAD
EWING, NJ 08628
(609) 771-3315

SITE / CIVIL:
MATRIX NEW WORLD
442 STATE ROUTE 35, 2ND FLOOR
EATONTOWN, NJ 07724
(732) 588-2999

ELECTRICAL:
KELTER & GILLIGO
14 WASHINGTON RD.
PRINCETON JCT, NJ 08550
(609) 799-8336

SUBMISSIONS

NO.	DATE	DESCRIPTION
1	3/14/14	100% CD SUBMISSION

REVISIONS

LANDSCAPE ARCHITECT
NJ LICENSE #AS06612
MICHAEL F. SULLIVAN
DATE 03/14/14

CAMPUS TOWN SIDEWALKS
THE COLLEGE OF
NEW JERSEY
EWING, NJ

DATE:	3/14/14
SCALE:	AS NOTED
DRAWN BY:	GKV/CK
CHECKED BY:	MFS

SHEET TITLE:
DETAILS

DRAWING NO.:
L104A

CCH PROJECT NO: 9013

12314031721071321
gvaughn N:\9000\9013_TCNJ_Campus Town Sidewalks\DWGS\2-Sheets\LA104A.dwg

1.0 SELECTION AND HANDLING OF PLANT MATERIAL

1. PLANTS WITH UNDERSIZED OR BROKEN ROOT BALLS, EXCESSIVE CURLING AND/OR GIRDLING OF ROOTS, INJURY FROM ROUGH TREATMENT, OR DROUGHT STRESS WILL BE REJECTED.

2. IT IS THE RESPONSIBILITY OF THE CONTRACTOR TO GUARANTEE THAT THE ROOT BALLS ARE PROPERLY SIZED. PLEASE BE AWARE THAT FOR PROPER SIZING, EXCESS ALIEN SOIL SHALL BE REMOVED PRIOR TO DIGGING. SEE DIAGRAM 1.2.

3. ROOT BALLS SHALL BE KEPT MOIST AT ALL TIMES.

4. PLANTS SHALL BE COVERED DURING TRANSPORT TO PREVENT DESICCATION FROM WIND. IN WARM WEATHER PLANTS SHALL BE COVERED JUST PRIOR TO TRAVEL AND UNCOVERED IMMEDIATELY UPON REACHING DESTINATION TO AVOID HEAT BUILD UP UNDER THE TARP. PLANT MATERIAL SHALL NOT BE LEFT IN DIRECT SUNLIGHT OR ON HIGH HEAT ABSORPTION MATERIALS, SUCH AS BUT NOT LIMITED TO, ASPHALT AND/ OR METAL TRUCK BEDS TO PREVENT THE WILTING OF MATERIAL.

5. TREES SHALL BE MOVED BY THEIR ROOT BALL NOT THEIR TRUNK. TREES LARGER THAN 6" SHALL BE MOVED WITH PROPER STRAPPING SECURING ROOT BALL TO EQUIPMENT. WEAVE STRAPPING THROUGH THE LACING, NOT AROUND THE TRUNK. TREE TRUNK SHALL BE PROTECTED AT ALL TIME FROM COMPRESSION AND SEARING.

6. IF PLANTS ARE NOT PLANTED IMMEDIATELY ON SITE, PROPER CARE SHALL BE TAKEN:
a. PLACE IN PARTIAL SHADE WHEN POSSIBLE.
b. COVER ROOT BALL WITH MOISTENED MULCH OR AGED WOODCHIPS.
c. SUPPLY PROPER IRRIGATION AS NOT TO ALLOW THE ROOT BALL TO DRY OUT.
d. UNTIE PLANT MATERIAL AND ALLOW PROPER SPACING OF PLANTS FOR AIR CIRCULATION TO PREVENT DISEASE, WILTING, LEAF LOSS AND GENERAL HEATH OF PLANTS.

1.1 STANDARD ROOT BALL SIZES FOR NURSERY-GROWN SHADE TREES

DECIDUOUS TREES

CALIPER* (IN.)	HEIGHT RANGE	MAX. HEIGHT	MIN. BALL DIA. (IN.)	MIN. BALL DEPTH (IN.)
½"	5'-6'	8'	12"	9"
¾"	6'-8'	10'	14"	10 ½"
1"	8'-10'	11'	16"	12"
1 ¼"	8'-10'	12'	18"	13 ½"
1 ½"	10'-12'	14'	20"	13 ½"
1 ¾"	10'-12'	14'	22"	14 ½"
2"	12'-14'	16'	24"	16"
2 ½"	12'-14'	16'	28"	18 ½"
3"	14'-16'	18'	32"	19 ½"
3 ½"	14'-16'	18'	38"	23"
4"	16'-18'	22'	42"	25"
5"	18'-20'	26'	54"	32 ½"

MULTI-STEM TREES

HEIGHT	MIN. BALL DIA. (IN.)	MIN. BALL DEPTH (IN.)
4'	14"	10 ½"
5'	16"	12"
6'	18"	13 ½"
7'	20"	13 ½"
8'	22"	14 ½"
10'	24"	16"
12'	28"	18 ½"
14'	32"	21 ½"
16'	38"	25 ½"
18'	42"	28"
20'	48"	32"

CONIFEROUS TREES

HEIGHT	MIN. BALL DIA. (IN.)	MIN. BALL DEPTH (IN.)
4'	16"	12"
5'	20"	13 ½"
6'	22"	14 ½"
7'	24"	16"
8'	27"	18 ½"
10'	34"	21 ½"
12'	38"	25 ½"
14'	42"	28"
16'	46"	32"
18'	50"	33 ½ "

1. SEE AMERICAN STANDARD FOR NURSERY STOCK, ANSI Z60.1, FOR COMPLETE LIST OF NURSERY STANDARDS FOR OTHER TYPES AND SIZES OF TREES AND SHRUBS.

2. UP TO AND INCLUDING THE 4-IN. CALIPER SIZE, THE CALIPER MEASUREMENT INDICATES THE DIAMETER OF THE TRUNK 6 IN. ABOVE GROUND LEVEL. FOR LARGER SIZES, THE CALIPER MEASUREMENT IS TAKEN 12 IN. ABOVE GROUND LEVEL.

1.2 TREE ROOT FLARE DIAGRAM

1. PRIOR TO DIGGING TREE AT NURSERY LOCATE THE ROOT FLARE. THIS WILL ALLOW FOR PROPER ROOT BALL SIZING BEFORE DIGGING.

2. PRIOR TO PLANTING, VERIFY THE TOP ELEVATION OF THE TRUE ROOT BALL BY REMOVING BURLAP. IF ALIEN SOIL IS PRESENT REMOVE UNTIL THE ROOT FLARE IS EXPOSED.

3. AT THIS TIME ANY GIRDLING OR CIRCLING ROOTS SHOULD BE REMOVED. EXCESSIVE GIRDLING OR CIRCLING ROOTS WILL CAUSE THE TREE TO BE REJECTED.

4. ONCE SOIL IS REMOVED RETIE DRUM LACING. IF BASKET IS PRESENT, RETIE TO BASKET.

5. IF TO MUCH SOIL IS REMOVE IN THE FIELD THE ROOT BALL IS EFFECTIVELY UNDERSIZED AND WILL BE REJECTED.

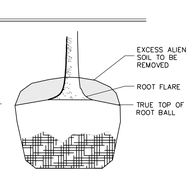

1.3 REMOVAL OF WIRE BASKETS (if present)

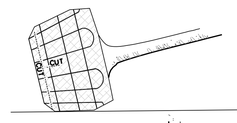

1. LAY TREE ON SIDE TO ACCESS BOTTOM OF TREE. CUT OFF THE BOTTOM OF THE BASKET AND REMOVE. CUT THE LOWEST HORIZONTAL WIRE OF BASKET ONLY. THIS MAY NOT BE ACCESSIBLE AFTER TREE IS IN THE PLANTING HOLE.

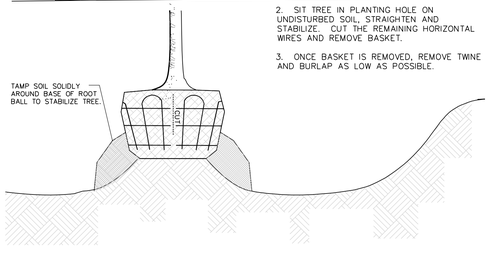

2. SIT TREE IN PLANTING HOLE ON UNDISTURBED SOIL, STRAIGHTEN AND STABILIZE. CUT THE REMAINING HORIZONTAL WIRES AND REMOVE BASKET.

3. ONCE BASKET IS REMOVED, REMOVE TWINE AND BURLAP AS LOW AS POSSIBLE.

1.4 GENERAL RANGE OF SOIL MODIFICATIONS AND VOLUMES FOR VARIOUS SOIL CONDITIONS (OTHER THAN GARDEN ROOF)

POST CONSTRUCTION SOIL CONDITION	MIN. WIDTH PREPARED SOIL FOR TREES (X)	TYPE OF PREPARATION
GOOD SOIL (NOT PREVIOUSLY GRADED OR COMPACTED, TOPSOIL LAYER INTACT)	6 FT. OR TWICE THE WIDTH OF THE ROOT BALL, WHICHEVER IS GREATER	LOOSEN THE EXISTING SOILS TO THE WIDTHS AND DEPTHS SHOWN ON PLANTING DETAILS.
COMPACTED SOIL (NOT PREVIOUSLY GRADED, TOPSOIL LAYER DISTURBED BUT NOT ELIMINATED)	15 FT.	LOOSEN THE EXISTING SOILS TO THE WIDTHS AND DEPTHS SHOWN ON PLANTING DETAILS; ADD COMPOSTED ORGANIC MATTER TO BRING THE CONTENT UP TO 5% DRY WEIGHT.
GRADED SUBSOILS AND CLEAN FILLS WITH CLAY CONTENT BETWEEN 5 AND 35 %	20 FT.	MINIMUM TREATMENT: LOOSEN EXISTING SOILS TO WIDTHS AND DEPTHS SHOWN. ADD COMPOSTED ORGANIC MATTER TO BRING ORGANIC CONTENT UP TO 5 % DRY WEIGHT. OPTIMUM TREATMENT: REMOVE TOP 8 TO 10 IN. OR THE EXISTING MATERIAL. LOOSEN EXISTING SOILS TO THE WIDTHS AND DEPTHS SHOWN IN THE PLANTING DETAILS. ADD 8 -10 IN. OF LOAM TOPSOIL.
POOR QUALITY FILLS, HEAVY CLAY SOILS, SOILS CONTAMINATED WITH RUBBLE OR TOXIC MATERIAL	20 FT.	REMOVE EXISTING SOILS TO THE WIDTHS AND DEPTHS SHOWN, REPLACE WITH LOAM AND TOPSOIL.

1.4 SOIL MODIFICATIONS cont.

1. THE QUALITY OF SOIL AVAILABLE FOR PLANTING VARIES WIDELY FROM SITE TO SITE, ESPECIALLY AFTER CONSTRUCTION ACTIVITY HAS OCCURRED. THE NATURE OF CONSTRUCTION RESULTS IN COMPACTION, FILLING, CONTAMINATION, AND GRADING OF THE ORIGINAL SOIL ON A SITE, RAPIDLY MAKING IT USELESS FOR PLANTING. PREVIOUS HUMAN ACTIVITY AT A SITE CAN ALSO AFFECT THE ABILITY OF THE SOIL TO SUPPORT PLANTS.

2. WHENEVER POSSIBLE THE SOIL IMPROVEMENT AREA SHOULD BE CONNECTED FROM TREE TO TREE.

3. ALWAYS TEST SOIL FOR PH, NUTRIENT LEVELS, AND TEXTURAL CLASS AND ADJUST THESE AS REQUIRED. SUBMIT TEST RESULTS TO THE LANDSCAPE ARCHITECT PRIOR TO PLANTING ALONG WITH SOIL IMPROVEMENT SUGGESTIONS. SOIL TESTS CAN BE ACQUIRED FROM YOUR LOCAL COUNTY AGRICULTURAL EXTENSION OR AT RUTGERS COOPERATIVE EXTENSION 732-932-9295.

4. LOOSEN SOIL WITH A BACK HOE OR OTHER LARGE COARSE-TILING EQUIPMENT WHEN POSSIBLE. THIS SHOULD NOT BE PERFORMED WHEN SOIL IS FROZEN OR EXCESSIVELY WET. TILING THAT PRODUCES LARGE, COARSE CHUNKS OF SOIL IS PREFERABLE TO TILING THAT RESULTS IN FINE GRAINS UNIFORM IN TEXTURE. AFTER AREA IS LOOSEN IT SHALL NOT BE DRIVEN OVER BY ANY VEHICLE.

5. APPLY PRE-EMERGENT WEED CONTROL TO ALL PLANT BEDS PRIOR TO MULCHING. ENSURE COMPATIBILITY BETWEEN PRODUCT AND PLANT MATERIAL.

6. PLANT BED/TREE PIT DRAINAGE: LANDSCAPE CONTRACTOR SHALL BE RESPONSIBLE FOR PROPER SURFACE AND SUBSURFACE PLANT BED DRAINAGE PRIOR TO INSTALLATION OF PLANTS. IF POOR DRAINAGE CONDITIONS EXIST, CORRECTIVE ACTION SHALL BE TAKEN PRIOR TO PLANTING.

7. ALL PLANTING SOIL SHALL BE AMENDED WITH THE FOLLOWING:

a. MYCOR®TREE SAVER- IS A DRY GRANULAR MYCORRHIZAL FUNGI INOCULANT THAT IS MIXED IN THE BACKFILL WHEN PLANTING TREES AND SHRUBS. IT CONTAINS SPORES OF BOTH ECTOMYCORRHIZAL AND VA MYCORRHIZAL FUNGI (VAM), BENEFICIAL RHIZOSPHERE BACTERIA, TERRA-SORB SUPERABSORBENT HYDROGEL TO REDUCE WATER LEACHING, AND SELECTED ORGANIC MICROBIAL NUTRIENTS.
DIRECTIONS FOR USE:
USE 3-OZ PER EACH FOOT DIAMETER OF THE ROOT BALL, OR 3-OZ PER INCH CALIPER. MIX INTO THE BACKFILL WHEN TRANSPLANTING TREES AND SHRUBS. MIX PRODUCT IN A RING-SHAPED VOLUME OF SOIL AROUND THE UPPER PORTION OF THE ROOT BALL, EXTENDING FROM THE SOIL SURFACE TO A DEPTH OF ABOUT 8-INCHES (20-CM), AND EXTENDING OUT FROM THE ROOT BALL ABOUT 8-INCHES (20-CM) INTO THE BACKFILL. APPLY WATER TO SOIL SATURATION.
COMPATIBILITY:
SPECIES: MYCOR®TREE SAVER®IS EFFECTIVE FOR ALL TREE AND SHRUB SPECIES EXCEPT RHODODENDRONS, AZALEAS, AND MOUNTAIN LAUREL, WHICH REQUIRE ERICOID MYCORRHIZAE. USE OF TREE SAVER®WITH THESE SPECIES WILL NOT HARM THEM.
SOIL PH: THE FUNGI IN THIS PRODUCT WERE CHOSEN BASED ON THEIR ABILITY TO SURVIVE AND COLONIZE PLANT ROOTS IN A PH RANGE OF 3 TO 9.
FUNGICIDES: THE USE OF CERTAIN FUNGICIDES CAN HAVE A DETRIMENTAL EFFECT ON YOUR INOCULATION PROGRAM. SOIL APPLICATION OF ANY FUNGICIDE IS NOT RECOMMENDED FOR TWO WEEKS AFTER APPLICATION.
OTHER PESTICIDES: HERBICIDES AND INSECTICIDES DO NOT NORMALLY INTERFERE WITH MYCORRHIZAL FUNGAL DEVELOPMENT, BUT MAY INHIBIT THE GROWTH OF SOME TREE AND SHRUB SPECIES IF NOT USED PROPERLY.

b. HEALTHY START MACRO TABS 12-8-8
FERTILIZER TABLETS ARE PLACED IN THE UPPER 4 INCHES OF BACKFILL SOIL WHEN PLANTING TREES AND SHRUBS. TABLETS ARE FORMULATED FOR LONG-TERM RELEASE BY SLOW BIODEGRADATION, AND LAST UP TO 2 YEARS AFTER PLANTING. TABLETS CONTAIN 12-8-8 NPK FERTILIZER, AS WELL AS A MINIMUM OF SEVEN PERCENT (7%) HUMIC ACID BY WEIGHT, MICROBIAL NUTRIENTS DERIVED FROM SEA KELP, PROTEIN BYPRODUCTS, AND YUCCA SCHIDIGERA, AND A COMPLEMENT OF BENEFICIAL RHIZOSPHERE BACTERIA. THE STANDARD 21 GRAM TABLET IS SPECIFIED HERE.
DIRECTIONS FOR USE:
FOR PLANTING BALLED & BURLAPPED (B&B) TREES AND SHRUBS, MEASURE THE THICKNESS OF THE TRUNK, AND USE ABOUT 1 TABLET (21-G) PER HALF-INCH. PLACE THE TABLETS DIRECTLY NEXT TO THE ROOT BALL, EVENLY DISTRIBUTED AROUND ITS PERIMETER, AT A DEPTH OF ABOUT 4 INCHES.

PROOF OF COMPLIANCE WITH SPECIFICATIONS:
THE CONTRACTOR WILL DEMONSTRATE COMPLIANCE BY SHOWING INVOICES TO PROVE PURCHASE OF PRODUCT IN SUFFICIENT QUANTITY TO COVER THE PROJECT AT THE RATES RECOMMENDED BY THE MANUFACTURER. INCLUDE PROJECT NAME, DATE OF PURCHASE OF PRODUCT, AND NAME OF CONTACT.

Plant Health Care, Inc., 440 William Pitt Way, Pittsburgh, PA 15238, Tel: (800) 421-9051, Fax: (412) 826-5445, www.planthealthcare.com

1.5 DECIDUOUS TREE PLANTING DETAIL

1. FOR CONTAINER GROWN TREES USE FINGERS OR SMALL HAND TOOLS TO PULL THE ROOTS OUT OF THE OUTER LAYER OF POTTING SOIL, THEN CUT OR PULL APART ANY ROOT CIRCLING THE PERIMETER OF THE CONTAINER.

2. INCORPORATE COMMERCIALLY PREPARED MYCORRHIZAE SPORES AND FERTILIZER TABLETS IN THE SOIL IMMEDIATELY AROUND THE ROOT BALL AT RATE SPECIFIED BY THE MANUFACTURER.

3. PRIOR TO INSTALLATION CONFIRM THE SOILS WILL DRAIN PROPERLY. IF NECESSARY PROVIDE PROPER DRAINAGE.

4. THOROUGHLY SOAK THE ROOT BALL AND THE ADJACENT PREPARED SOIL SEVERAL TIMES DURING THE FIRST MONTH AFTER PLANTING AND REGULARLY THROUGHOUT THE FOLLOWING TWO GROWING SEASONS. WHEN IRRIGATION IS NOT PROVIDED SPECIFICALLY FOR THE TREE, IT IS RECOMMENDED THAT GATOR BAGS ARE USED TO HELP FACILITATE THE PROPER AMOUNT AND RATE OF WATER ARE ACHIEVED. GATOR BAGS SHALL BE INSTALLED AT THE BEGINNING OF EACH GROWING SEASON AND REMOVED EACH FALL. THIS WILL ALLOW FOR THE AREA BENEATH THE GATOR BAG TO DRY OUT REDUCING THE GROWTH OF FUNGUS AND REMOVE POSSIBLE HIDING SPOTS FOR RODENTS. THE GATOR BAGS WILL BE REMOVED AT THE END OF THE SECOND GROWING SEASON UNLESS OTHERWISE ADVISED.

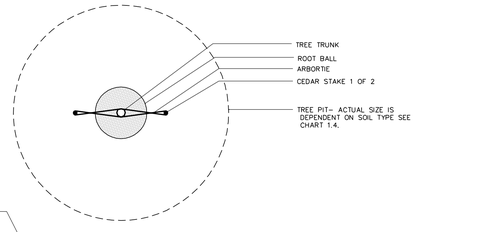

PLAN VIEW-NOT TO SCALE

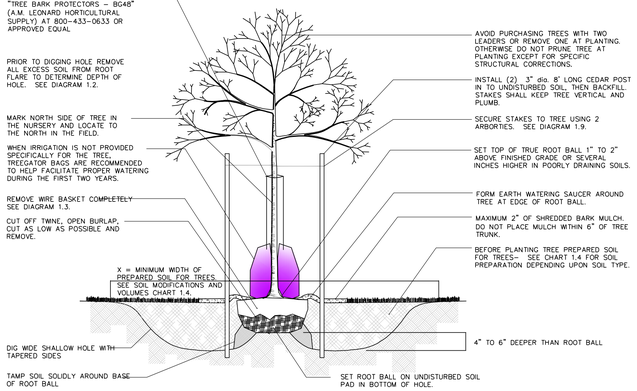

1.6 CONIFEROUS TREE PLANTING DETAIL

1. FOR CONTAINER GROWN TREES USE FINGERS OR SMALL HAND TOOLS TO PULL THE ROOTS OUT OF THE OUTER LAYER OF POTTING SOIL, THEN CUT OR PULL APART ANY ROOT CIRCLING THE PERIMETER OF THE CONTAINER.

2. INCORPORATE COMMERCIALLY PREPARED MYCORRHIZAE SPORES AND FERTILIZER TABLETS IN THE SOIL IMMEDIATELY AROUND THE ROOT BALL AT RATE SPECIFIED BY THE MANUFACTURER.

3. PRIOR TO INSTALLATION CONFIRM THE SOILS WILL DRAIN PROPERLY. IF NECESSARY PROVIDE PROPER DRAINAGE.

4. THOROUGHLY SOAK THE ROOT BALL AND THE ADJACENT PREPARED SOIL SEVERAL TIMES DURING THE FIRST MONTH AFTER PLANTING AND REGULARLY THROUGHOUT THE FOLLOWING TWO SUMMERS. WHEN IRRIGATION IS NOT PROVIDED SPECIFICALLY FOR THE TREE, IT IS RECOMMENDED THAT GATOR BAGS ARE USED TO HELP FACILITATE THE PROPER AMOUNT AND RATE OF WATER ARE ACHIEVED. GATOR BAGS SHALL BE INSTALLED AT THE BEGINNING OF EACH GROWING SEASON AND REMOVED EACH FALL. THIS WILL ALLOW FOR THE AREA BENEATH THE GATOR BAG TO DRY OUT REDUCING THE GROWTH OF FUNGUS AND REMOVE POSSIBLE HIDING SPOTS FOR RODENTS.

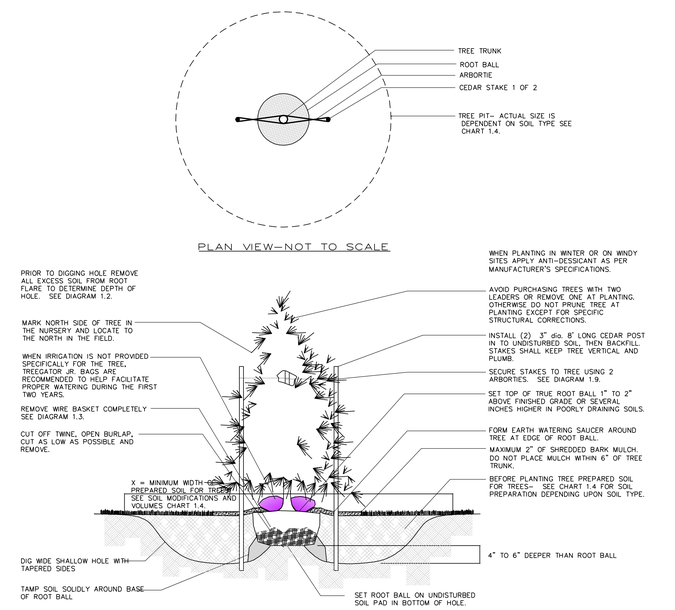

PLAN VIEW-NOT TO SCALE

1.7 SHRUB PLANTING DETAIL

1. FOR CONTAINER GROWN TREES USE FINGERS OR SMALL HAND TOOLS TO PULL THE ROOTS OUT OF THE OUTER LAYER OF POTTING SOIL, THEN CUT OR PULL APART ANY ROOT CIRCLING THE PERIMETER OF THE CONTAINER.

2. INCORPORATE COMMERCIALLY PREPARED MYCORRHIZAE SPORES AND FERTILIZER TABLETS IN THE SOIL IMMEDIATELY AROUND THE ROOT BALL AT RATE SPECIFIED BY THE MANUFACTURER.

3. PRIOR TO INSTALLATION CONFIRM THE SOILS WILL DRAIN PROPERLY. IF NECESSARY PROVIDE PROPER DRAINAGE.

4. THOROUGHLY SOAK THE ROOT BALL AND THE ADJACENT PREPARED SOIL SEVERAL TIMES DURING THE FIRST MONTH AFTER PLANTING AND REGULARLY THROUGHOUT THE FOLLOWING TWO SUMMERS.

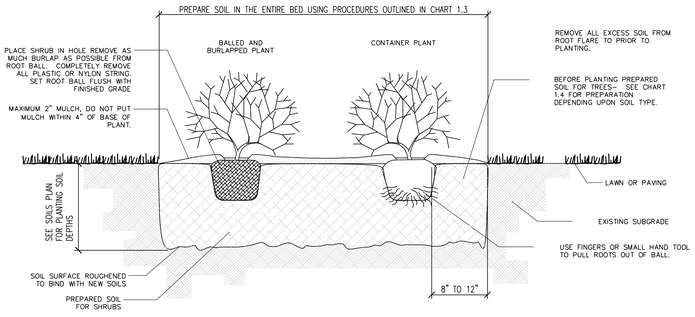

1.8 GROUNDCOVER AND PLUG PLANTING DETAIL

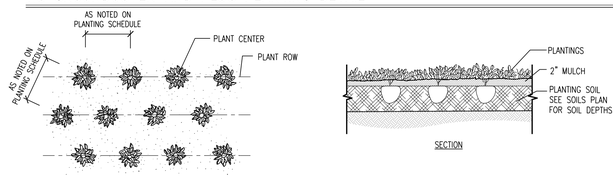

TYPICAL SPACING PLAN

1.9 TREE PROTECTION DETAIL

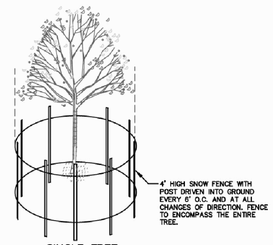

SINGLE TREE

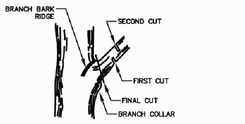

BRANCH PRUNING

NOTES:
1. PROTECTIVE FENCING IS TO BE ERECTED PRIOR TO CONSTRUCTION AND MAINTAINED DURING CONSTRUCTION AS DIRECTED BY THE LANDSCAPE ARCHITECT, SOIL CONSERVATION DISTRICT AND/OR MUNICIPAL ENGINEER.
2. NO CONSTRUCTION ACTIVITY IS PERMITTED WITHIN THE PROTECTIVE FENCING.
3. AS CONSTRUCTION NEARS COMPLETION THE FENCING WILL BE REMOVED AS DIRECTED.
4. AT THE COMPLETION OF CONSTRUCTION ALL TREES WILL BE PRUNED AS NECESSARY TO CORRECT ANY DAMAGE RESULTING FROM CONSTRUCTION ACTIVITY.
5. GENERAL MECHANICAL DAMAGE - SEE DETAIL ABOVE FOR CORRECT PLACEMENT OF TREE PROTECTION.
6. BOX TREES WITHIN 25 FEET OF A BUILDING SITE TO PREVENT MECHANICAL INJURY. FENCING OR OTHER BARRIER SHOULD BE INSTALLED AT THE DRIP LINE OF THE TREE BRANCHES.
7. BOARDS WILL NOT BE NAILED TO TREES DURING BUILDING OPERATIONS.
8. FEEDER ROOTS SHOULD NOT BE CUT IN AN AREA INSIDE THE DRIP LINE OF THE TREE BRANCHES.
9. DAMAGED TRUNKS OR EXPOSED ROOTS SHOULD HAVE DAMAGED BARK REMOVED IMMEDIATELY AND NO PAINT SHALL BE APPLIED. EXPOSED ROOTS SHOULD BE COVERED WITH TOPSOIL IMMEDIATELY AFTER EXCAVATION IS COMPLETE. ROOTS SHALL BE PRUNED TO GIVE A CLEAN, SHARP SURFACE AMENABLE TO HEALING. ROOTS EXPOSED DURING HOT WEATHER SHOULD BE IRRIGATED TO PREVENT PERMANENT TREE INJURY. CARE FOR SERIOUS INJURY SHOULD BE PRESCRIBED BY A PROFESSIONAL FORESTER OR CERTIFIED TREE EXPERT.
10. TREE LIMB REMOVAL WHERE NECESSARY, WILL BE DONE AS NATURAL TARGET PRUNING TO REMOVE THE DESIRED BRANCH COLLAR. THERE SHOULD BE NO FLUSH CUTS. FLUSH CUTS DESTROY A MAJOR DEFENSE SYSTEM OF THE TREE. NO TREE PAINT SHALL BE APPLIED. ALL CUTS SHALL BE MADE AT THE OUTSIDE EDGE OF THE BRANCH COLLAR. CUTS MADE TOO DESTROY A MAJOR DEFENSE SYSTEM OF THE TREE. NO TREE PAINT SHALL BE APPLIED. ALL CUTS SHALL BE MADE AT THE OUTSIDE EDGE OF THE BRANCH COLLAR. CUTS MADE TOO FAR BEYOND THE BRANCH COLLAR MAY LEAD TO EXCESS SPROUTING, CRACKS AND ROT. REMOVAL OF A "V" CROTCH SHOULD BE CONSIDERED FOR FREE STANDING SPECIMEN TREES TO AVOID FUTURE SPLITTING DAMAGE.

Clarke Caton Hintz
Architecture
Planning
Landscape Architecture
100 Barrack Street
Trenton, NJ 08608
tel (609) 883-8383
fax (609) 883-4044
www.clarkecatonhintz.com

Drawings Copyright ©2012 Clarke Caton Hintz, PC

OWNER:
THE COLLEGE OF NEW JERSEY
2000 PENNINGTON ROAD
EWING, NJ 08628
(609) 771-3315

SITE / CIVIL:
MATRIX NEW WORLD
442 STATE ROUTE 35, 2ND FLOOR
EATONTOWN, NJ 07724
(732) 588-2999

ELECTRICAL:
KELTER & GILLIGO
14 WASHINGTON RD.
PRINCETON JCT. NJ 08550
(609) 799-8336

SUBMISSIONS

NO.	DATE	DESCRIPTION
1	3/14/14	100% CD SUBMISSION

REVISIONS

LANDSCAPE ARCHITECT
N.J. LICENSE #AS00612
MICHAEL F. SULLIVAN
DATE 03/14/14

CAMPUS TOWN SIDEWALKS
THE COLLEGE OF NEW JERSEY
EWING, NJ

DATE: 3/14/14
SCALE: AS NOTED
DRAWN BY: GKV/CK
CHECKED BY: MFS

SHEET TITLE:
PLANTING DETAILS

DRAWING NO.:
L105

CCH PROJECT NO: 9013

1 PLANTING DETAILS

12314032121017321
gvaughn N:\9000\9013_TCNJ_Campus Town Sidewalks\DWGS\2-Sheets\LA105.dwg

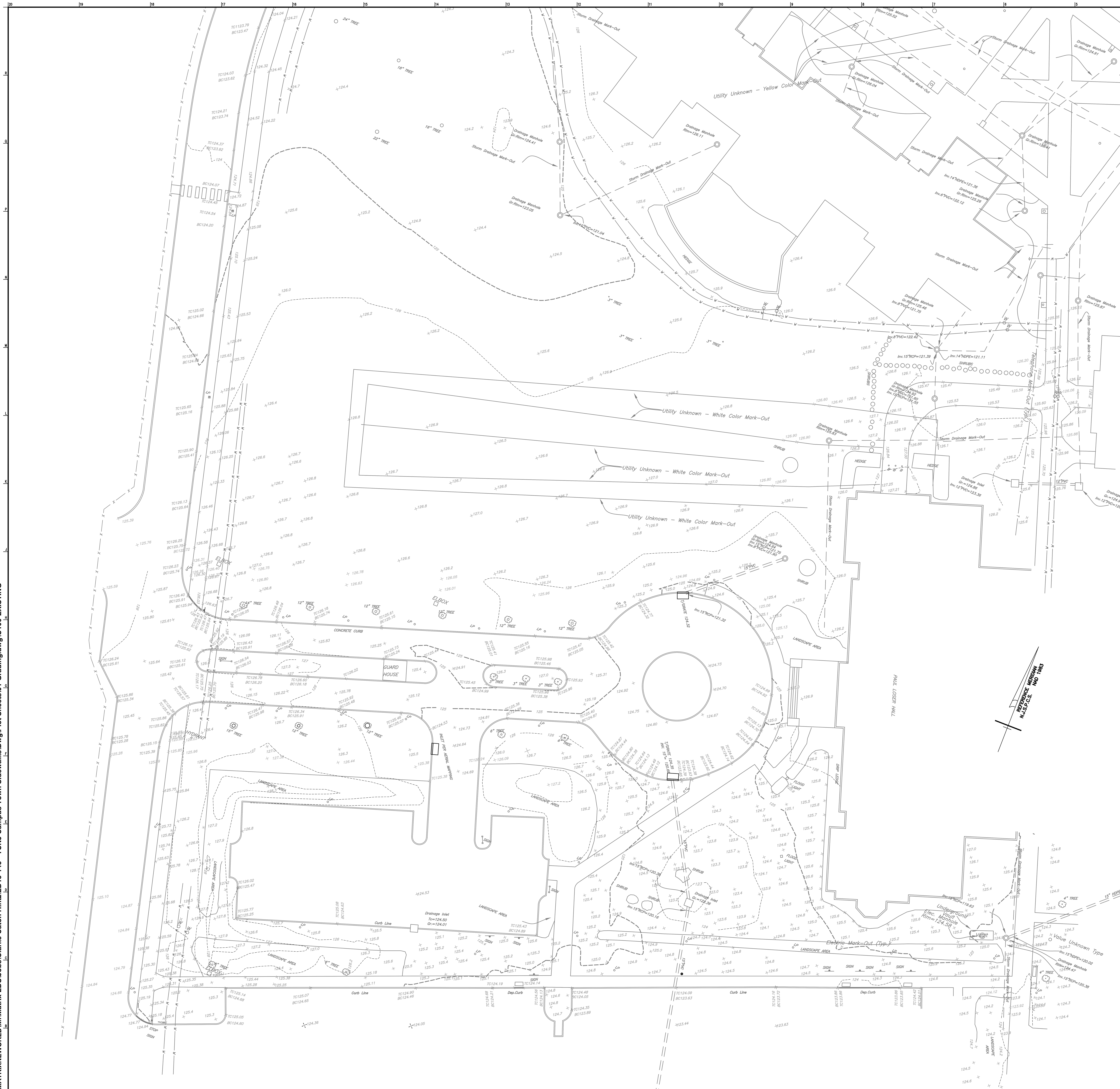

20 15 10 5 0 20 40 60

GRAPHIC SCALE
1 inch=20 feet

LEGEND

Face of Curb	CURB LINE
Depressed Curb	DEPRESSED CURB
	EDGE OF PAVEMENT
— x — x — x —	FENCE
	GUIDE RAIL
— E — E —	UNDERGROUND ELECTRIC LINE
—OHW—OHW—	OVER HEAD WIRE
— T — T —	UNDERGROUND TELEPHONE
— CATV —	UNDERGROUND CABLE TELEVISION
— G — G —	GAS LINE
— W — W —	WATER LINE
	TREE LINE
TW	TOP OF WALL
BW	BOTTOM OF WALL
FF 100.00	FINISHED FLOOR
x 56.00	SPOT ELEVATION GROUND SURVEY
BC 156.00	BOTTOM OF CURB
TC 105.17	TOP OF CURB
GR 104.50	GRATE ELEVATION
B	BOLLARD
	SIGN
MB	MAIL BOX
	FIRE HYDRANT
W	WATER VALVE
WM	WATER METER
G	GAS VALVE
GM	GAS METER
CO	SANITARY CLEAN OUT
	MANHOLE
	STORM DRAINAGE INLET
	UTILITY POLE
	GUY ANCHOR
	LIGHT POLE
	SINGLE HEAD LAMP
UK	UNKNOWN VALVE
	TREE

NOTES:

FOR TOPOGRAPHIC SURVEY REFER TO PLAN ENTITLED "CAMPUS TOWN SIDEWALKS, THE COLLEGE OF NEW JERSEY, TOWNSHIP OF EWING, COUNTY OF MERCER, NEW JERSEY, TOPOGRAPHIC SURVEY", BY MATRIX NEW WORLD ENGINEERING, INC. SHEET TP-1, DATED 2/12/14.

1. THE PROJECT HORIZONTAL DATUM IS THE NEW JERSEY STATE PLANE COORDINATE SYSTEM NAD 83. DETERMINED BY DIFFERENTIAL GPS USING THE NGS CORS NETWORK AND PROCESSED USING THE NGS OPUS SERVICE.
2. THE PROJECT VERTICAL DATUM IS THE NORTH AMERICAN VERTICAL DATUM 1988 (NAVD 88), GEOID 12. DETERMINED BY DIFFERENTIAL GPS USING THE NGS CORS NETWORK AND PROCESSED USING THE NGS OPUS SERVICE.
3. ALL COORDINATE VALUES AND LINEAR DIMENSIONS SHOWN HERE ON ARE IN US SURVEY FEET.
4. UTILITIES HAVE BEEN SHOWN FROM EVIDENCE LOCATED ON THE SURFACE ONLY. THE SURVEYOR MAKES NO GUARANTEES THAT THE UTILITIES SHOWN COMPRISE ALL SUCH UTILITIES IN THE AREA EITHER IN SERVICE OR ABANDONED. THE SURVEYOR FURTHER DOES NOT WARRANT THAT THE UNDERGROUND UTILITIES SHOWN ARE IN THE EXACT LOCATION INDICATED. THE SURVEYOR HAS NOT PHYSICALLY LOCATED THE UNDERGROUND UTILITIES.
5. IF THIS DOCUMENT DOES NOT CONTAIN A RAISED SEAL OF THE UNDERSIGNED PROFESSIONAL, IT IS NOT AN AUTHORIZED ORIGINAL DOCUMENT.
6. THIS SURVEY REPRESENTS FIELD CONDITIONS AS OF NOVEMBER 12, 2013.

Clarke Caton Hintz
Architecture
Planning
Landscape Architecture
100 Barrack Street
Trenton, NJ 08608
tel: (609) 883-8383
fax: (609) 883 4044
www.clarkecatonhintz.com

Drawings Copyright ©2012 Clarke Caton Hintz, PC

OWNER:
THE COLLEGE OF NEW JERSEY
2000 PENNINGTON ROAD
EWING, NJ 08628
(609) 771-3315

SITE / CIVIL:
MATRIX NEW WORLD
442 STATE ROUTE 35, 2ND FLOOR
EATONTOWN, NJ 07724
(732) 588-2999

ELECTRICAL:
KELTER & GILLIGO
14 WASHINGTON RD.
PRINCETON JCT. NJ 08550
(609) 799-8336

SUBMISSIONS

NO.	DATE	DESCRIPTION
1	3/14/14	100% CD SUBMISSION

REVISIONS

DATE --/--/--

MATRIXNEWORLD
Enabling Progress
Matrix New World Engineering, Inc.
442 State Route 35, Second Floor
Eatontown, New Jersey 07724
WBE / DBE / SBE
NEW JERSEY CERTIFICATE OF AUTHORIZATION No. 24GA27962300
Tel: 732-588-2999
Fax: 973-240-1818
www.matrixneworld.com

MARK S. CIFELLI, P.E.
NEW JERSEY PROFESSIONAL ENGINEER
LICENSE NO. 24GE04926900

DATE

CAMPUS TOWN SIDEWALKS THE COLLEGE OF NEW JERSEY

EWING, NJ

DATE:	1/30/14
SCALE:	AS SHOWN
DRAWN BY:	MSC
CHECKED BY:	PS

SHEET TITLE:
EXISTING CONDITIONS PLAN

DRAWING NO.:
C100

CCH PROJECT NO: 1234

Plotted: 3/12/2014 4:36 PM, By: Mark Cifelli
© MATRIXNEWORLD\M:\Matrix LDS\Jobs\Clarke Caton Hintz\LD13-145 - TCNJ Campus Town Sidewalks\Dwg\Plot Sheets\01-Grading.dwg\C100-EXISTING

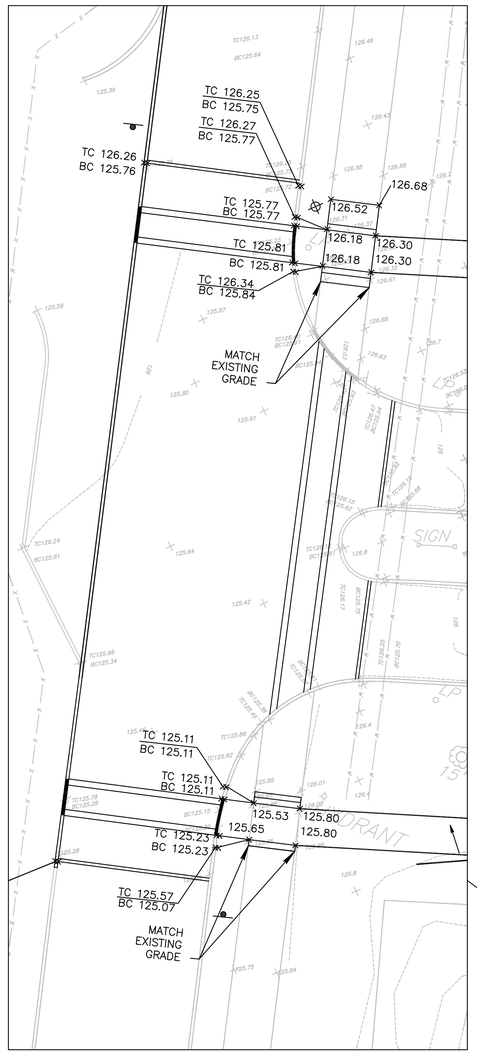

ENLARGED INTERSECTION GRADING

SCALE: 1"=10'

GRAPHIC SCALE
1 inch=10 feet

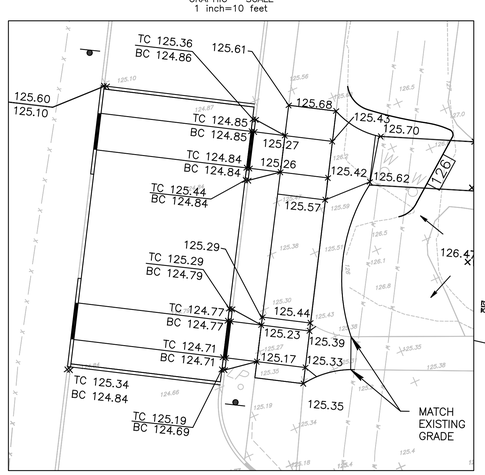

ENLARGED INTERSECTION GRADING

SCALE: 1"=10'

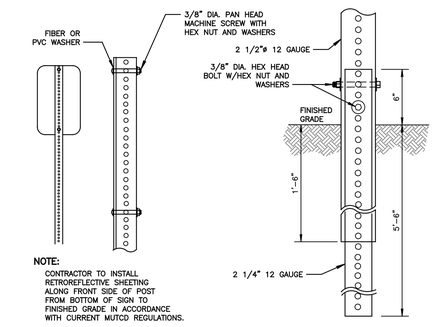

NOTE:
CONTRACTOR TO INSTALL RETROREFLECTIVE SHEETING ALONG FRONT SIDE OF POST FROM BOTTOM OF SIGN TO FINISHED GRADE IN ACCORDANCE WITH CURRENT MUTCD REGULATIONS.

SIGN PANEL ATTACHMENT

BREAKAWAY SIGN POST

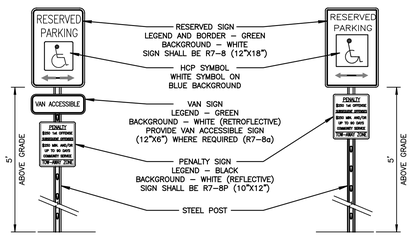

GENERAL NOTES:

1. ALL SIGNS SHALL BE MINIMUM 18 GUAGE STEEL WITH BAKED ON ENAMEL FINISH. PROVIDE WITH PRE-PUNCHED MOUNTING HOLES.
2. POSTS: 2" STEEL U-CHANNEL BREAKAWAY POST
3. SIGNS AND POSTS SHALL BE IN ACCORDANCE WITH LOCAL ORDINANCES.

HANDICAP PARKING SIGNS AND POSTS

NOT TO SCALE

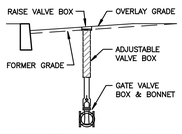

RESET VALVE BOX

NOT TO SCALE

NOTES:

1. THIS PLAN IS FOR GRADING AND SOIL EROSION PURPOSES ONLY. SEE SITE PLANS BY CLARKE CATON HINTZ ENTITLED "CAMPUS TOWN SIDEWALKS, THE COLLEGE OF NEW JERSEY, EWING, NJ" FOR ALL OTHER CONSTRUCTION ITEMS.
2. THE CONTRACTOR IS TO CONFIRM THE LOCATION OF ANY POTENTIAL UTILITY CONFLICTS PRIOR TO CONSTRUCTION. TEST PITS MAY BE REQUIRED.
3. CONTRACTOR TO USE LIGHT WEIGHT CONSTRUCTION EQUIPMENT TO THE MAXIMUM EXTENT PRACTICABLE TO MINIMIZE SITE DISTURBANCE AND COMPACTION.
4. SURVEY DATA IS BASED ON THE SURVEY ENTITLED "CAMPUS TOWN SIDEWALKS, THE COLLEGE OF NEW JERSEY, EWING TOWNSHIP, MERCER COUNTY, NEW JERSEY, TOPOGRAPHIC SURVEY" BY MATRIX NEW WORLD ENGINEERING, INC., SHEET TP-1, DATED 2/12/14.
5. EXISTING UTILITY INFORMATION AS SHOWN HERE ON IS BASED UPON PROVIDED UTILITY INFORMATION AS SHOWN HERE ON IS BASED UPON PROVIDED UTILITY MARK-OUT AND MATRIX NEW WORLD.
6. THE CONTRACTOR IS DIRECTED TO THE FACT THAT THE APPROXIMATE LOCATIONS OF KNOWN UTILITY STRUCTURES AND FACILITIES (INCLUDING BUT NOT LIMITED TO SANITARY SEWERS, STORM SEWERS, POTABLE WATER LINES AND APPURTENANCES, NATURAL GAS LINES, ELECTRIC, TELEPHONE AND CATV LINES AND UNDERGROUND STORAGE TANKS) THAT MAY BE ENCOUNTERED WITHIN AND ADJACENT TO THE LIMITS OF THE WORK ARE SHOWN ON THE PLANS. THE ACCURACY AND COMPLETENESS OF THIS INFORMATION IS NOT GUARANTEED BY THE ENGINEER, AND THE CONTRACTOR IS ADVISED TO VERIFY IN THE FIELD ALL THE FACTS CONCERNING THE LOCATION AND ELEVATION OF THESE UTILITIES OR OTHER CONSTRUCTION OBSTACLES IMPACTED BY NEW CONSTRUCTION PRIOR TO CONSTRUCTION. THE CONTRACTOR SHALL NOTIFY THE ENGINEER, IN WRITING, PRIOR TO CONSTRUCTION
7. ALL SIDEWALKS ARE TO CONFORM TO THE ACCESSIBILITY STANDARDS SET FORTH IN THE AMERICANS WITH DISABILITIES ACT.
8. ALL GRADING WITHIN GRASSED AREAS TO BE A MINIMUM OF 2% AND A MAXIMUM OF 3:1 (3 HORIZONTAL, 1 VERTICAL) SLOPE UNLESS OTHERWISE NOTED.
9. ALL EXCAVATED SOIL TO BE DISPOSED SHALL BE PROPERLY CLASSIFIED, HANDLED, AND DISPOSED OF OFF-SITE IN ACCORDANCE WITH ALL LOCAL, STATE, AND FEDERAL REGULATIONS
10. ALL IMPORTED SOILS MUST BE CERTIFIED CLEAN FILL IN ACCORDANCE WITH THE NJDEP TECHNICAL REQUIREMENTS NJAC 7:26E. IMPORTED SOILS SHALL BE PLACED IN ACCORDANCE WITH THE GEOTECHNICAL SUBSURFACE INVESTIGATION REPORT. ALL IMPORTED MATERIAL REQUIRES APPROVAL BY OWNER PRIOR TO PLACEMENT ONSITE.
11. ALL CONTRACTORS MUST CALL THE NEW JERSEY ONE CALL SYSTEM (800-272-4000) IN ACCORDANCE WITH THE UNDERGROUND FACILITIES CONTROL ACT LAW PRIOR TO ANY SUBSURFACE ACTIVITY. A MINIMUM OF 2 WEEKS NOTICE IS REQUIRED FOR MARK-OUTS.
12. ALL GRASSED AREAS TO HAVE A MINIMUM OF 4" CLEAN TOP SOIL, WHEN SOD IS BEING INSTALLED, OR 6" CLEAN TOP SOIL FOR SEEDING APPLICATIONS.

SESC LEGEND

EXISTING	PROPOSED
	LIMIT OF DISTURBANCE
	SILT FENCE
	INLET PROTECTION

GRADING LEGEND

EXISTING	PROPOSED
	CURB LINE
	DEPRESSED CURB
	EDGE OF PAVEMENT
	PAINT LINE
	CONCRETE
	FENCE
	RETAINING WALL/BULKHEAD
	CONTOURS
	MINOR 93
	MAJOR 90
x 56.00	SPOT ELEVATION x 56.00
	HIGH POINT ELEVATION x HP 56.50
	LOW POINT ELEVATION x LP 55.50
BC 56.00	GUTTER ELEVATION BC 56.00
TC 105.17	TOP OF CURB ELEVATION TC 105.17
GR 104.50	GRATE ELEVATION GR 104.50
RIM 100.00	RIM ELEVATION RIM 100.00
TW 100.00	TOP OF WALL TW 100.00
BW 98.00	BOTTOM OF WALL BW 98.00
	DRAINAGE FLOW DIRECTION
	STORM DRAIN
	INLET
	DOUBLE INLETS
	RESET INLET
	MANHOLE
	RESET MANHOLE

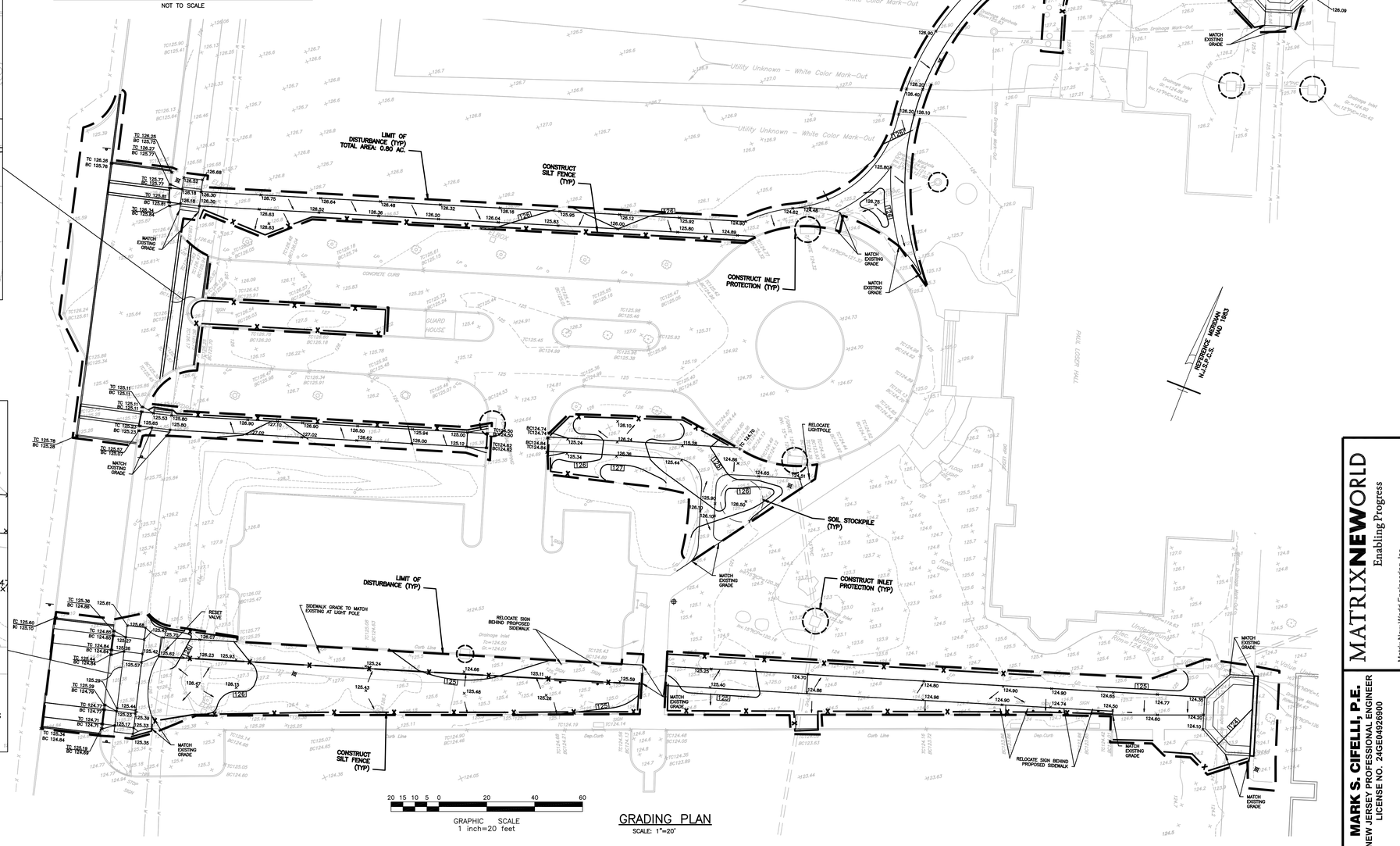

GRAPHIC SCALE
1 inch=20 feet

GRADING PLAN

SCALE: 1"=20'

Clarke Caton Hintz
Architecture
Planning
Landscape Architecture
100 Barrack Street
Trenton, NJ 08608
tel (609) 883-8383
fax (609) 883-4044
www.clarkecatonhintz.com

Drawings Copyright, ©2012, Clarke Caton Hintz, PC

OWNER:
THE COLLEGE OF NEW JERSEY
2000 PENNINGTON ROAD
EWING, NJ 08628
(609) 771-3315

SITE / CIVIL:
MATRIX NEW WORLD
442 STATE ROUTE 35, 2ND FLOOR
EATONTOWN, NJ 07724
(732) 588-2999

ELECTRICAL:
KELTER & GILLIGO
14 WASHINGTON RD.
PRINCETON JCT. NJ 08550
(609) 799-8336

SUBMISSIONS

NO.	DATE	DESCRIPTION
1	3/14/14	100% CD SUBMISSION

REVISIONS

DATE: —/—/—

CAMPUS TOWN SIDEWALKS THE COLLEGE OF NEW JERSEY

EWING, NJ

DATE:	1/30/14
SCALE:	AS SHOWN
DRAWN BY:	MSC
CHECKED BY:	PS

SHEET TITLE:
GRADING AND SOIL EROSION & SEDIMENT CONTROL PLAN

DRAWING NO.:
C101

CCH PROJECT NO: 1234

MATRIXNEWORLD
Enabling Progress
Matrix New World Engineering, Inc.
442 State Route 35, Second Floor
Eatontown, New Jersey 07724
Tel: 732-588-2999
Fax: 973-240-1818
www.matrixneworld.com
NEW JERSEY CERTIFICATE OF AUTHORIZATION No. 24GA27902300
WBE / DBE / SBE

MARK S. CIFELLI, P.E.
NEW JERSEY PROFESSIONAL ENGINEER
LICENSE NO. 24GE04926900
DATE

Plotted: 3/12/2014 4:35 PM, By: Mark Cifelli
© MATRIXNEWORLD\M:\Matrix LDS\Jobs\Clarke Caton Hintz\LD13-145 - TCNJ Campus Town Sidewalks\Dwg\Plot Sheets\01-Grading.dwg|C101-GRADING & SESC

MERCER COUNTY SOIL CONSERVATION DISTRICT SOIL EROSION AND SEDIMENT CONTROL GENERAL NOTES

1. ALL SOIL EROSION AND SEDIMENT CONTROL PRACTICES SHALL BE INSTALLED PRIOR TO ANY MAJOR SOIL DISTURBANCES, OR IN THEIR PROPER SQUENCE AND MAINTAINED UNTIL PERMANENT PROTECTION IS ESTABLISHED.
2. ANY DISTURBED AREAS THAT WILL BE LEFT EXPOSED MORE THAN 30 DAYS, AND NOT SUBJECT TO CONSTRUCTION TRAFFIC, WILL IMMEDIATELY RECIEVE A TEMPORARY SEEDING. IF THE SEASON PREVENTS THE ESTABLISHMENT OF A TEMPORARY COVER, THE DISTURBED AREAS WILL BE MULCHED WITH STRAW, OR EQUIVALENT MATERIAL, AT A RATE OF TWO (2) TONS PER ACRE, ACCORDING TO STATE STANDARDS FOR STABILIZATION WITH MULCH ONLY.
3. PERMANENT VEGETATION SHALL BE SEEDED OR SODDED ON ALL EXPOSED AREAS WITHIN TEN (10) DAYS AFTER FINAL GRADING. MULCH WILL BE USED FOR PROTECTION UNTIL SEEDING IS ESTABLISHED.
4. ALL WORK TO BE DONE IN ACCORDANCE WITH THE STANDARDS FOR SOIL EROSION AND SEDIMENT CONTROL IN NEW JERSEY, LATEST EDITION.
5. A SUB-BASE COURSE WILL BE APPLIED IMMEDIATELY FOLLOWING ROUGH GRADING AND INSTALLATION OF IMPROVEMENTS TO STABILIZE STREETS, ROADS, DRIVEWAYS, AND PARKING AREAS. IN AREAS WHERE NO UTILITIES ARE PRESENT, THE SUBBASE SHALL BE INSTALLED WITHIN 15 DAYS OF THE PRELIMINARY GRADING.
6. IMMEDIATELY FOLLOWING INITIAL DISTURBANCE OR ROUGH GRADING, ALL CRITICAL AREAS SUBJECT TO EROSION (i.e. STEEP SLOPES AND ROADWAY EMBANKMENTS) WILL RECEIVE A TEMPORARY SEEDING IN COMBINATION WITH STRAW MULCH OR A SUITABLE EQUIVALENT, AT A RATE OF TWO (2) TONS PER ACRE, ACCORDING TO STATE STANDARDS.
7. ANY STEEP SLOPES RECEIVING PIPELINE INSTALLATION WILL BE BACKFILLED AND STABILIZED DAILY, AS THE INSTALLATION CONTINUES (i.e. SLOPES GREATER THAN 3:1).
8. TRAFFIC CONTROL STANDARDS REQUIRE THE INSTALLATION OF A 50'X30'X1'PAD OF 1 1/2" OR 2" STONE, AT ALL CONSTRUCTION DRIVEWAYS, IMMEDIATELY AFTER INITIAL SITE DISTURBANCE.
9. IN ACCORDANCE WITH THE STANDARD FOR PERMANENT VEGETATIVE COVER FOR SOIL STABILIZATION, ANY SOIL HAVING A PH OF 4 OR LESS OR CONTAINING IRON SULFIDES SHALL BE COVERED WITH A MINIMUM OF 12" OF SOIL HAVING A PH OF 5 OR MORE PRIOR TO SEEDBED PREPARATION.
10. THE MERCER COUNTY SOIL CONSERVATION DISTRICT SHALL BE NOTIFIED 48 HOURS IN ADVANCE OF ANY LAND DISTURBING ACTIVITY. MERCER COUNTY SCD, 508 HUGHES DRIVE HAMILTON SQUARE, NJ 08690. TEL.: 609-586-9603 FAX: 609-586-1117.
11. AT THE TIME WHEN THE SITE PREPARATION FOR PERMANENT VEGETATIVE STABILIZATION IS GOING TO BE ACCOMPLISHED, ANY SOIL THAT WILL NOT PROVIDE A SUITABLE ENVIRONMENT TO SUPPORT ADEQUATE VEGETATIVE GROUND COVER, SHALL BE REMOVED OR TREATED IN SUCH A WAY THAT WILL PERMANENTLY ADJUST THE SOIL CONDITIONS AND RENDER IT SUITABLE FOR VEGETATIVE GROUND COVER.
    IF THE REMOVAL OR TREATMENT OF THE SOIL WILL NOT PROVIDE SUITABLE CONDITIONS, NON-VEGETATIVE MEANS OF PERMANENT GROUND STABILIZATION WILL HAVE TO BE EMPLOYED.
12. IN THAT N.J.S.A. 4:24-39 et seq. REQUIRES THAT NO CERTIFICATES OF OCCUPANCY BE ISSUED BEFORE THE PROVISIONS OF THE CERTIFIED PLAN FOR SOIL EROSION AND SEDIMENT CONTROL HAVE BEEN COMPLIED WITH FOR PERMANENT MEASURES, ALL SITE WORK FOR SITE PLANS AND ALL WORK AROUND INDIVIDUAL LOTS IN SUBDIVISIONS, WILL HAVE TO BE COMPLETED PRIOR TO THE DISTRICT ISSUING A REPORT OF COMPLIANCE FOR THE ISSUANCE OF A CERTIFICATE OF OCCUPANCY BY THE MUNICIPALITY.
13. CONDUIT OUTLET PROTECTION MUST BE INSTALLED AT ALL REQUIRED OUTFALLS PRIOR TO THE DRAINAGE SYSTEM BECOMING OPERATIONAL.
14. ANY CHANGES TO THE CERTIFIED SOIL EROSION AND SEDIMENT CONTROL PLANS WILL REQUIRE THE SUBMISSION OF REVISED SOIL EROSION AND SEDIMENT CONTROL PLANS TO THE DISTRICT FOR RECERTIFICATION. THE REVISED PLANS MUST MEET ALL CURRENT STATE SOIL EROSION AND SEDIMENT CONTROL STANDARDS.
15. THE MERCER COUNTY SOIL CONSERVATION DISTRICT SHALL BE NOTIFIED OF ANY CHANGES IN OWNERSHIP.
16. MULCHING TO THE STANDARDS IS REQUIRED FOR OBTAINING A CONDITIONAL REPORT OF COMPLIANCE. CONDITIONALS ARE ONLY ISSUED WHEN THE SEASON PROHIBITS SEEDING.
17. CONTRACTOR IS RESPONSIBLE FOR KEEPING ALL ADJACENT ROADS CLEAN DURING LIFE OF CONSTRUCTION PROJECT.
18. THE DEVELOPER SHALL BE RESPONSIBLE FOR REMEDIATING ANY EROSION OR SEDIMENT PROBLEMS THAT ARISE AS A RESULT OF ONGOING CONSTRUCTION AT THE REQUEST OF THE MERCER COUNTY SOIL CONSERVATION DISTRICT
19. HYDROSEEDING IS A TWO STEP PROCESS. THE FIRST STEP INCLUDES SEED, FERTILIZER, LIME, ETC., ALONG WITH MINIMAL AMOUNTS OF MULCH TO PROMOTE CONSISTENCY, GOOD SEED TO SOIL CONTACT, AND GIVE A VISUAL INDICATION OF COVERAGE. UPON COMPLETION OF SEEDING OPERATION, HYDRO-MULCH SHOULD BE APPLIED AT A RATE OF 1500 LBS. PER ACRE IN SECOND STEP. THE USE OF HYDRO-MULCH, AS OPPOSED TO STRAW, IS LIMITED TO OPTIMUM SEEDING DATES AS LISTED IN THE STANDARDS.

CONSTRUCTION SEQUENCE

EXACT TIMING FOR DEVELOPMENT OF THIS PROJECT IS NOT KNOWN AT THIS TIME. HOWEVER, IT IS ANTICIPATED THAT CONSTRUCTION WILL COMMENCE IN SPRING 2014 AND WILL PROCEED IMMEDIATELY AND CONTINUOUSLY ONCE THE REQUIRED APPROVALS ARE SECURED. ITEMS AND DURATIONS OF CONSTRUCTION WILL OCCUR APPROXIMATELY AS FOLLOWS:

	PHASE	DURATION
1.	TEMPORARY SOIL EROSION FACILITIES	IMMEDIATELY
2.	INSTALL SILT FENCE	IMMEDIATELY
3.	ROUGH CLEARING AND GRADING	3 WEEKS
4.	TEMPORARY SEEDING *	IMMEDIATELY
5.	INLET PROTECTION	IMMEDIATELY
6.	CURB & SIDEWALK INSTALLATION	1 WEEK
7.	ROAD CONSTRUCTION	1 WEEK
8.	MAINTENANCE OF TEMPORARY EROSION CONTROL MEASURES	CONTINUOUSLY
9.	FINAL SEEDING AND LANDSCAPING	2 WEEKS

*TEMPORARY SEEDING SHALL ALSO BE PERFORMED WHEN NECESSARY IN ACCORDANCE WITH NOTE NO. 2 OF THE SOIL EROSION AND SEDIMENT CONTROL NOTES.

SPPP REQUIRED INSPECTIONS AND REPORTS

1. ROUTINE INSPECTIONS
   A. THE PERMITTEE SHALL CONDUCT AND DOCUMENT ROUTINE INSPECTIONS OF THE FACILITY TO IDENTIFY AREAS CONTRIBUTING TO THE STORMWATER DISCHARGE AUTHORIZED BY THIS PERMIT AND EVALUATE WHETHER THE STORMWATER POLLUTION PREVENTION PLAN (SPPP) IDENTIFIED UNDER e.1 OF THE 5G3-CONSTRUCTION ACTIVITY STORMWATER (GP) PART 1 NARRATIVE REQUIREMENTS, INCLUDING THIS SOIL EROSION AND SEDIMENT CONTROL PLAN IS BEING PROPERLY IMPLEMENTED AND MAINTAINED, OR WHETHER ADDITIONAL MEASURES ARE NEEDED TO IMPLEMENT THE SPPP. (ROUTINE INSPECTIONS MINIMUM WEEKLY).

   HIGH ACID PRODUCING SOILS WITH A pH OF 4 OR LESS, OR CONTAINING IRON SULFIDE, (INCLUDING BORROW FROM CUTS) SHALL BE ULTIMATELY PLACED OR BURIED WITH LIMESTONE APPLIED AT A RATE OF 6 TONS PER ACRE (OR 275 POUNDS PER 1.000 SQUARE FEET OF SURFACE AREA) AND COVERED WITH A MINIMUM OF 12 INCHES OF SETTLED SOIL WITH A pH OF 5 OR MORE EXCEPT AS FOLLOWS:

   HIGH ACID PRODUCING SOILS WITH A pH OF 4 OR LESS, OR CONTAINING IRON SULFIDE, (INCLUDING BORROW FROM CUTS) SHALL BE ULTIMATELY PLACED OR BURIED WITH LIMESTONE APPLIED AT A RATE OF 6 TONS PER ACRE (OR 275 POUNDS PER 1.000 SQUARE FEET OF SURFACE AREA) AND COVERED WITH A MINIMUM OF 12 INCHES OF SETTLED SOIL WITH A pH OF 5 OR MORE EXCEPT AS FOLLOWS:

   OTHER RECORD-KEEPING REQUIREMENTS

   THE CONTRACTOR SHALL KEEP THE FOLLOWING RECORDS RELATED TO CONSTRUCTION ACTIVITIES AT THE SITE:
   - DATES WHEN MAJOR GRADING ACTIVITIES OCCUR AND THE AREAS WHICH WERE GRADED
   - DATES AND DETAILS CONCERNING THE INSTALLATION OF STRUCTURAL CONTROLS
   - DATES WHEN CONSTRUCTION ACTIVITIES CEASE IN AN AREA
   - DATES WHEN AN AREA IS STABILIZED, EITHER TEMPORARILY OR PERMANENTLY
   - DATES OF RAINFALL AND THE AMOUNT OF RAINFALL
   - DATES AND DESCRIPTIONS OF THE CHARACTER AND AMOUNT OF ANY SPILLS OF HAZARDOUS MATERIALS
   - RECORDS OF REPORTS FILED WITH REGULATORY AGENCIES IF REPORTABLE QUANTITIES OF HAZARDOUS MATERIALS SPILLED
   - A VISIBLE SIGN SHALL BE POSTED ON THE SITE TO IDENTIFY THE LOCATION OF SPPP
2. ANNUAL REPORTS AND CERTIFICATIONS.
   A. THE PERMITTEE SHALL PREPARE AN ANNUAL REPORT SUMMARIZING EACH INSPECTION PERFORMED UNDER 1.A., ABOVE. THIS REPORT SHALL BE ACCOMPANIED BY AN ANNUAL CERTIFICATION, ON A FORM PROVIDED BY THE NJDEP THAT THE FACILITY IS IN COMPLIANCE WITH ITS SPPP AND THIS PERMIT, EXCEPT THAT IF THERE ARE ANY INCIDENTS OF NONCOMPLIANCE, THOSE INCIDENTS SHALL BE IDENTIFIED IN THE CERTIFICATION. IF THERE ARE INCIDENTS OF NONCOMPLIANCE, THE REPORT SHALL IDENTIFY THE STEPS BEING TAKEN TO REMEDY THE NONCOMPLIANCE AND TO PREVENT SUCH INCIDENTS FROM RECURRING. THE REPORT AND CERTIFICATION SHALL BE SIGNED AND DATED BY THE PERMITTEE IN ACCORDANCE WITH N.J.A.C. 7:14A-4.9. AND SHALL BE MAINTAINED FOR A PERIOD OF AT LEAST FIVE YEARS ALONG WITH COPIES OF ALL INSPECTION REPORTS AND RECORD KEEPING. THIS PERIOD MAY BE EXTENDED BY WRITTEN REQUEST FROM THE DEPARTMENT AT ANY TIME (SEE N.J.A.C. 7:14A-6.6)
3. REPORTS OF NONCOMPLIANCE
   A. ALL INSTANCES OF NONCOMPLIANCE NOT REPORTED UNDER N.J.A.C. 7:140A-6.10 SHALL BE REPORTED TO THE DEPARTMENT ANNUALLY.
4. NOTIFICATION OF COMPLETION
   A. THE SOIL CONSERVATION DISTRICT WILL PROVIDE THE DEPARTMENT A COPY OF THE REPORT OF COMPLIANCE ISSUED UNDER N.J.A.C. 2:90-1 FOR COMPLETED CONSTRUCTION ACTIVITIES, EXCEPT SINGLE FAMILY HOME CONSTRUCTION UNDER B. BELOW. THE REPORT OF COMPLIANCE SHALL SERVE AS THE NOTIFICATION OF COMPLETION.
   B. THE BUILDER OF A SINGLE FAMILY HOME THAT IS AUTHORIZED UNDER THIS PERMIT, BUT NOT WITHIN THE DEFINITION OF "PROJECT" AT N.J.S.A. 4:24-41G, SHALL SEND A COPY OF THE FINAL CERTIFICATE OF OCCUPANCY TO THE SOIL CONSERVATION DISTRICT. THE SOIL CONSERVATION DISTRICT WILL PROVIDE A COPY OF THE FINAL CERTIFICATION OF OCCUPANCY TO THE DEPARTMENT, WHICH WILL SERVE AS NOTIFICATION OF COMPLETION.
   C. THE DOT SHALL PROVIDE WRITTEN NOTIFICATION TO THE DEPARTMENT WHEN DOT CERTIFIED PROJECTS ARE COMPLETED.

MITIGATION NOTES FOR ACIDIC SOIL

1. LIMIT THE EXCAVATION AREA AND EXPOSURE TIME WHEN HIGH ACID PRODUCING SOILS ARE ENCOUNTERED.
2. TOPSOIL STRIPPED FROM THE SITE SHALL BE STORED SEPARATELY FROM TEMPORARILY STOCKPILED HIGH ACID PRODUCING SOILS.
3. STOCKPILES OF HIGH ACID PRODUCING SOIL SHOULD BE LOCATED ON LEVEL LAND TO MINIMIZE ITS MOVEMENT, ESPECIALLY WHEN THIS MATERIAL HAS A HIGH CLAY CONTENT.
4. TEMPORARILY STOCKPILED HIGH ACID PRODUCING SOIL MATERIAL TO BE EXPOSED MORE THAN 30 DAYS SHOULD BE COVERED WITH PROPERLY ANCHORED, HEAVY GRADE SHEETS OF POLYETHYLENE WHERE POSSIBLE. IF NOT POSSIBLE, STOCKPILES SHALL BE COVERED WITH A MINIMUM OF 3 TO 6 INCHES OF WOOD CHIPS TO MINIMIZE EROSION OF THE STOCKPILE. SILT FENCE SHALL BE INSTALLED AT THE TOE OF SLOPE TO CONTAIN MOVEMENT OF THE STOCKPILED MATERIAL. TOPSOIL SHALL NOT BE APPLIED TO THE STOCKPILES TO PREVENT TOPSOIL CONTAMINATION WITH HIGH ACID PRODUCING SOIL.
5. HIGH ACID PRODUCING SOILS WITH A pH OF 4 OR LESS, OR CONTAINING IRON SULFIDE, (INCLUDING BORROW FROM CUTS) SHALL BE ULTIMATELY PLACED OR BURIED WITH LIMESTONE APPLIED AT A RATE OF 6 TONS PER ACRE (OR 275 POUNDS PER 1.000 SQUARE FEET OF SURFACE AREA) AND COVERED WITH A MINIMUM OF 12 INCHES OF SETTLED SOIL WITH A pH OF 5 OR MORE EXCEPT AS FOLLOWS:
   A. AREAS WHERE TREES OR SHRUBS ARE TO BE PLANTED SHALL BE COVERED WITH A MINIMUM OF 24 INCHES OF SOIL WITH A pH OF 5 OR MORE.
   B. DISPOSAL AREAS SHALL NOT BE LOCATED WITHIN 24 INCHES OF ANY SURFACE OF A SLOPE OR BANK, SUCH AS BERMS, STREAM BANKS, DITCHES AND OTHERS TO PREVENT POTENTIAL LATERAL LEACHING DAMAGES.
6. EQUIPMENT USED FOR MOVEMENT OF HIGH ACID PRODUCING SOILS SHOULD BE CLEANED AT THE END OF EACH DAY TO PREVENT SPREADING OF HIGH ACID SOIL MATERIALS TO OTHER PARTS OF THE SITE, INTO STREAMS OR STORMWATER CONVEYANCES AND TO PROTECT MACHINERY FROM ACCELERATED RUSTING.
7. NON VEGETATIVE EROSION CONTROL PRACTICES (STONE TRACKING PADS, STRATEGICALLY PLACED LIMESTONE CHECK DAM, SILT FENCE, WOOD CHIPS) SHOULD BE INSTALLED TO LIMIT THE MOVEMENT OF HIGH ACID PRODUCING SOILS FROM, AROUND OR OFF THE SITE.
8. FOLLOWING BURIAL OR REMOVAL OF HIGH ACID PRODUCING SOIL, TOPSOILING AND SEEDING OF THE SITE, (SEE TEMPORARY VEGETATIVE COVER FOR SOIL STABILIZATION, PG. 7-1, PERMANENT VEGETATIVE COVER FOR SOIL STABILIZATION, PG. 4-1 AND STANDARDS FOR SOIL EROSION AND SEDIMENT CONTROL IN NEW LATEST EDITION). MONITORING SHOULD CONTINUE FOR APPROXIMATELY 6 TO 12 MONTHS TO ASSURE THERE IS ADEQUATE STABILIZATION AND THAT NO HIGH ACID SOIL PROBLEMS EMERGE. IF PROBLEMS STILL EXIST THE AFFECTED AREA MUST BE TREATED AS INDICATED ABOVE TO CORRECT THE PROBLEM.
9. MONITORING OF AREAS WHERE HIGH ACID PRODUCING SOIL HAS BEEN PLACED OR BURIED SHOULD BE PERFORMED FOR AT LEAST 2 YEARS OR LONGER IF PROBLEMS OCCUR, TO ASSURE THERE IS NO MIGRATION OF POTENTIAL ACIDE LEACHATE.

RIPRAP SPECIFICATIONS

RIPRAP GRADATION

THE RIPRAP SHALL BE COMPOSED OF WELL-GRADED MIXTURE SUCH THAT 50% OF THE MIXTURE BY WEIGHT SHALL BE LARGER THAN THE d50 SIZE AS DETERMINED FROM THE DESIGN PROCEDURE. A WELL-GRADED MIXTURE AS USED HEREIN IS DEFINED AS A MIXTURE COMPOSED PRIMARILY OF THE LARGER STONE SIZES BUT WITH A SUFFICIENT MIXTURE OF OTHER SIZES TO FILL THE PROGRESSIVELY SMALLER VOIDS BETWEEN THE STONES. THE DIAMETER OF THE LARGEST STONE SIZE IN SUCH A MIXTURE SHALL BE 1.5 TIMES THE d50 SIZE. THE d75 SHOULD BE 1.25 TIMES THE d50 AND THE d15 SHOULD BE 0.5 TIMES THE d50 SIZE.

THE DESIGNER AFTER DETERMINING THE RIPRAP SIZE THAT WILL BE STABLE UNDER THE FLOW CONDITION SHALL CONSIDER THAT SIZE TO BE A MINIMUM SIZE AND THEN, BASED ON RIPRAP GRADATIONS ACTUALLY AVAILABLE IN THE AREA SELECT THE SIZE OR SIZES THAT EQUAL OR EXCEED THE MINIMUM SIZE. THE POSSIBILITY OF VANDALISM SHALL BE CONSIDERED BY THE DESIGNER IN SELECTING A RIPRAP SIZE. IF THE d50 SIZE IS INCREASED, THE APRON THICKNESS SHALL BE INCREASED PROPORTIONATELY.

FILTER

SYNTHETIC FILTER FABRIC SHALL MEET THE U.S. ARMY CORPS OF ENGINEERS GUIDE SPECS, CWO2215, NOVEMBER 1977 FOR STRENGTH. RIPRAP THAT IS 12" AND LARGER SHALL NOT BE DUMPED DIRECTLY ONTO SYNTHETIC FILTER CLOTH UNLESS THE MANUFACTURER RECOMMENDS SUCH USE OF THE CLOTH. OTHERWISE, A 4" MINIMUM THICKNESS BLANKET OF GRAVEL SHALL BE PLACED DIRECTLY ON THE FILTER CLOTH BY HAND OR BY THE BUCKET OF THE EQUIPMENT.

QUALITY

STONE FOR RIPRAP SHALL CONSIST OF FIELD STONE OR QUARRY STONE OF APPROXIMATELY RECTANGULAR SHAPE. THE STONE SHALL BE HARD AND ANGULAR AND OF SUCH QUALITY THAT IT WILL NOT DISINTEGRATE ON EXPOSURE TO WATER OR WEATHERING. THE SPECIFIC GRAVITY ON THE INDIVIDUAL STONES SHALL BE AT LEAST 2.5.

RUBBLE CONCRETE MAY BE USED, PROVIDED IT HAS A DENSITY OF AT LEAST 150 POUNDS PER CUBIC FOOT, AND OTHERWISE MEETS THE REQUIREMENTS OF THIS STANDARD.

CONSTRUCTION SITE WASTE CONTROL COMPONENT OF THE STORMWATER POLLUTION PREVENTION PLAN (SPPP)

(THIS IS FOR CONSTRUCTION WASTE ONLY)

1. THE CONSTRUCTION SITE WASTE CONTROL COMPONENT OF THE SPPP CONSISTS OF THE REQUIREMENT IN 2., 3., AND 4. BELOW. THESE REQUIREMENTS BECOME OPERATIVE ON MARCH 3, 2004 AND APPLY TO CONSTRUCTION ACTIVITIES THAT COMMENCE ON OR AFTER MARCH 3, 2004. ANY NEW CONSTRUCTION ACTIVITY FOR WHICH AN RFA IS SUBMITTED ON OR AFTER MARCH 3, 2004 OR WHICH WILL RECEIVE AUTOMATIC RENEWAL OR AUTHORIZATION UNDER THIS PERMIT AFTER MARCH 3, 2004 ALSO SHALL COMPLY WITH THESE REQUIREMENTS.
2. MATERIAL MANAGEMENT TO PREVENT OR REDUCE WASTE - ANY PESTICIDES, FERTILIZERS, FUELS, LUBRICANTS, PETROLEUM PRODUCTS, ANTI-FREEZE, PAINTS AND PAINT THINNERS, CLEANING SOLVENTS AND ACIDS, DETERGENTS, CHEMICAL ADDITIVES, AND CONCRETE CURING COMPOUNDS SHALL BE STORED IN CONTAINERS IN A DRY COVERED AREA. MANUFACTURERS' RECOMMENDED APPLICATION RATES, USES, AND METHODS SHALL BE STRICTLY FOLLOWED TO THE EXTENT NECESSARY TO PREVENT OR MINIMIZE THE PRESENCE OF WASTE FROM SUCH MATERIALS IN THE STORMWATER DISCHARGE AUTHORIZED BY THIS PERMIT (THE PRECEDING SENTENCE DOES NOT APPLY TO ANY MANUFACTURERS' RECOMMENDATIONS ABOUT FERTILIZER OR OTHER MATERIAL THAT CONFLICT WITH THE EROSION AND SEDIMENT CONTROL COMPONENT OF THE FACILITY'S SPPP.)
3. WASTE HANDLING - THE FOLLOWING REQUIREMENTS APPLY ONLY TO CONSTRUCTION SITE WASTE THAT HAS THE POTENTIAL TO BE TRANSPORTED BY THE STORMWATER DISCHARGE AUTHORIZED BY THIS PERMIT. THE HANDLING AT THE CONSTRUCTION SITE OF WASTE BUILDING MATERIAL AND RUBBLE AND OTHER CONSTRUCTION SITE WASTES, INCLUDING LITTER AND HAZARDOUS AND SANITARY WASTES, SHALL CONFORM WITH THE STATE SOLID WASTE MANAGEMENT ACT, N.J.S.A. 13:1E- ET SEQ., AND ITS IMPLEMENTING RULES AT N.J.A.C. 7:26, 7:26A, AND 7:26G, THE NEW JERSEY PESTICIDE CONTROL CODE AT N.J.A.C. 7:30, THE STATE LITTER STATUTE N.J.S.A. 13:1e-99.3); AND OSHA REQUIREMENTS FOR SANITATION AT 29 C.F.R., 1926 (EXCEPT WHERE SUCH CONFORMANCE IS NOT RELEVANT TO THE STORMWATER DISCHARGE AUTHORIZED BY THIS PERMIT). CONSTRUCTION SITES SHALL HAVE ONE OR MORE DESIGNATED WASTE COLLECTION AREAS ONSITE OR ADJACENT TO THE SITE, AND AN ADEQUATE NUMBER OF CONTAINERS (WITH LIDS OR COVERS) FOR WASTE. WASTE SHALL BE COLLECTED FROM SUCH CONTAINERS BEFORE THEY OVERFLOW, AND SPILLS AT SUCH CONTAINERS SHALL BE CLEANED UP IMMEDIATELY.
   A. CONSTRUCTION SITE WASTES INCLUDE BUT ARE NOT LIMITED TO:
      I. "CONSTRUCTION AND DEMOLITION WASTE", AS DEFINED IN N.J.A.C. 7:7:26-1.4 AS FOLLOWS: "WASTE BUILDING MATERIAL AND RUBBLE RESULTING FROM CONSTRUCTION, REMODELING, REPAIR, AND DEMOLITION OPERATIONS ON HOUSES, COMMERCIAL BUILDINGS, PAVEMENTS AND OTHER STRUCTURES. THE FOLLOWING MATERIALS MAY BE FOUND IN CONSTRUCTION AND DEMOLITION WASTE: TREATED AND UNTREATED WOOD SCRAP; TREE PARTS, TREE STUMPS AND BRUSH; CONCRETE, ASPHALT, BRICKS, BLOCKS AND OTHER MASONRY; PLASTER AND WALLBOARD; ROOFING MATERIALS; CORRUGATED CARDBOARD AND MISCELLANEOUS PAPER; FERROUS AND NON-FERROUS METAL; NON-ASBESTOS BUILDING INSULATION; PLASTIC SCRAP; DIRT; CARPETS AND PADDING, GLASS (WINDOW AND DOOR); AND OTHER MISCELLANEOUS MATERIALS; BUT SHALL NOT INCLUDE OTHER SOLID WASTE TYPES."
      II. ANY WASTE BUILDING MATERIAL AND RUBBLE RESULTING FROM SUCH OPERATIONS THAT IS HAZARDOUS FOR PURPOSES OF N.J.A.C 7:26G (THE HAZARDOUS WASTE RULES).
      III. DISCARDED (INCLUDING SPILLED) PESTICIDES, FERTILIZERS, FUELS, LUBRICANTS, PETROLEUM PRODUCTS, ANTI-FREEZE, PAINTS AND PAINT THINNERS, PAINT CHIPS AND SANDBLASTING GRITS, CLEANING SOLVENTS, ACIDS FOR CLEANING MASONRY SURFACES, DETERGENTS, CHEMICAL ADDITIVES USED FOR SOIL STABILIZATION (E.G. CALCIUM CHLORIDE), AND CONCRETE CURING COMPOUNDS.
      IV. OTHER "LITTER" AS DEFINED AT N.J.S.A. 13:1E-215.D AS FOLLOWS: "ANY USED OR UNCONSUMED SUBSTANCE OR WASTE MATERIAL WHICH HAS BEEN DISCARDED WHETHER MADE OF ALUMINUM, GLASS, PLASTIC, RUBBER, PAPER, OR OTHER NATURAL OR SYNTHETIC MATERIAL, OR ANY COMBINATION THEREOF, INCLUDING, BUT NOT LIMITED TO, ANY BOTTLE, JAR OR CAN, OR ANY TOP, CAP OR DETACHABLE TAB OF ANY BOTTLE, JAR OR CAN, ANY UNLIGHTED CIGARETTE, CIGAR, MATCH OR ANY FLAMING OR GLOWING MATERIAL OR ANY GARBAGE, TRASH, REFUSE, DEBRIS, RUBBISH, GRASS CLIPPINGS OR OTHER LAWN OR GARDEN WASTE, NEWSPAPERS, MAGAZINES, CLASS, METAL, PLASTIC OR PAPER CONTAINERS OR OTHER PACKAGING OR CONSTRUCTION MATERIAL, BUT DOES NOT INCLUDE THE WASTE OF THE PRIMARY PROCESSES OF MINOR OR OTHER EXTRACTION PROCESSES, LOGGING, SAWMILLING, FARMING OR MANUFACTURING."
      V. SANITARY SEWAGE AND SEPTAGE.
      VI. CONTAMINATED SOILS ENCOUNTERED OR DISCOVERED DURING EARTHMOVING ACTIVITIES OR DURING THE CLEANUP OF A LEAK OR DISCHARGE OF A HAZARDOUS SUBSTANCE.
   B. CONCRETE TRUCK WASHOUT - CONCRETE TRUCK WASHOUT ONSITE IS PROHIBITED OUTSIDE DESIGNATED AREAS. DESIGNATED WASHOUT AREAS SHALL BE LINED AND BERMED TO PREVENT DISCHARGES TO SURFACE AND GROUND WATER. HARDENED CONCRETE FROM CONCRETE TRUCK WASHOUT SHALL BE REMOVED AND PROPERLY DISPOSED OF.
   C. SANITARY SEWAGE/SEPTAGE DISPOSAL - DISCHARGES OF RAW SANITARY SEWAGE OR SEPTAGE ONSITE ARE STRICTLY PROHIBITED. ADEQUATE FACILITIES WITH PROPER DISPOSAL SHALL BE PROVIDED AND MAINTAINED ONSITE OR ADJACENT TO THE SITE FOR ALL WORKERS AND OTHER SANITARY NEEDS.
4. SPILLS: DISCHARGE OF HAZARDOUS SUBSTANCES,
   A. SPILL KITS SHALL BE AVAILABLE ONSITE OR ADJACENT TO THE SITE FOR ANY MATERIALS THAT ARE LISTED IN 2 ABOVE AND USED OR APPLIED ONSITE. ALL SPILLS OF SUCH MATERIAL SHALL BE CONTAINED AND CLEANED UP IMMEDIATELY. CLEANED UP MATERIALS SHALL BE PROPERLY DISPOSED OF.
   B. DISCHARGES OF HAZARDOUS SUBSTANCES (AS DEFINED IN N.J.A..C. 7:1E-1.6) IN CONSTRUCTION SITE WASTES ARE SUBJECT TO THE PROVISIONS OF THE SPILL COMPENSATION AND CONTROL ACT, NJAC 58:10-23.11 ET SEQ., AND OF DEPARTMENT RULES FOR DISCHARGE OF PETROLEUM AND OTHER HAZARDOUS SUBSTANCES AT NJAC 7:1E. NO DISCHARGE OF HAZARDOUS SUBSTANCES RESULTING FROM AN ONSITE SPILL SHALL BE DEEMED TO BE "PURSUANT TO AND IN COMPLIANCE WITH (THIS) PERMIT" WITHIN THE MEANS OF THE SPILL COMPENSATION AND CONTROL ACT AT NJSA 58;10-2311C.
   C. RELEASES IN EXCESS OF REPORTABLE QUANTITIES (RQ) ESTABLISHED UNDER 40 C.F.R. 110, 117 AND 302 THAT OCCUR WITHIN A 24-HOUR PERIOD MUST BE REPORTED TO THE NATIONAL RESPONSE CENTER (800-424-8802)

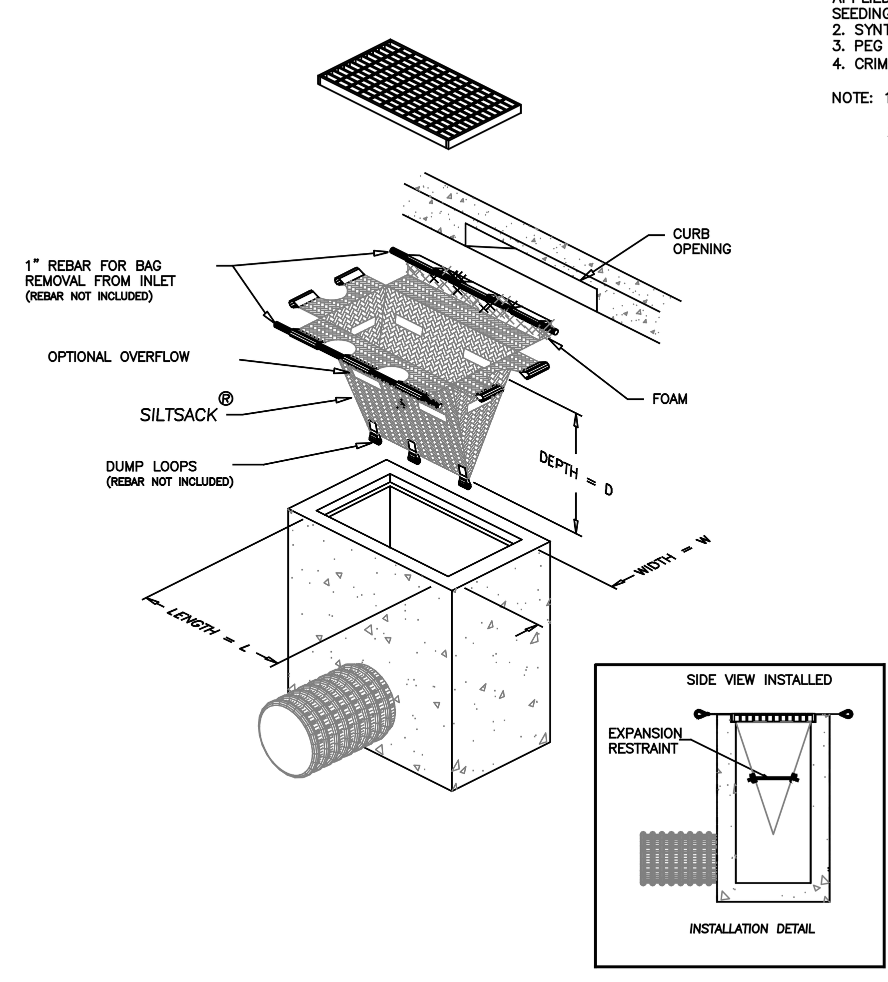

INLET PROTECTION DETAIL

NOT TO SCALE

STANDARD FOR PERMENENT VEGETATIVE COVER FOR SOIL STABILIZATION

1. TOPSOIL STRIPPING AND STOCKPILING
   A. FIELD EXPLORATION SHOULD BE MADE TO DETERMINE WHETHER QUANTITY AND/OR QUALITY OF SURFACE SOIL JUSTIFIES STRIPPING.
   B. A 6-INCH STRIPPING DEPTH IS TYPICAL, BUT MAY VARY DEPENDING ON THE PARTICULAR SOIL STRUCTURE OR PRE-EXISTING USE.
   C. STOCKPILES SHOULD BE LOCATED SO AS NOT TO OBSTRUCT NATURAL DRAINAGE OR CAUSE OFF-SITE ENVIRONMENTAL DAMAGE, AND SHALL BE DELINEATED ON THE CERTIFIED SOIL EROSION AND SEDIMENT CONTROL PLAN AND BE CONSTRUCTED IN ACCORDANCE WITH THE TOPSOIL STOCKPILE DETAIL.
   D. STOCKPILES SHOULD BE TEMPORARILY STABILIZED ACCORDING TO THE STANDARDS.
2. SITE PREPARATION
   A. INSTALL EROSION CONTROL MEASURES AND FACILITIES SUCH AS SILT FENCE, DIVERSIONS, SEDIMENT BASINS, AND CHANNEL STABILIZATION.
   B. GRADE AS NEEDED AND FEASIBLE TO PERMIT THE USE OF CONVENTIONAL EQUIPMENT FOR SEEDBED PREPARATION, SEEDING, MULCH APPLICATION, TACKING, AND MAINTENANCE. ALL GRADING SHOULD BE DONE IN ACCORDANCE WITHE THE STANDARD OF LAND GRADING, 19-1
3. SEEDBED PREPARATION
   A. TOPSOIL REQUIRED
      MIN DEPTH: 5" (UNSETTLED)
      PH: 6.0 TO 8.0
      ORGANIC MATTER CONTENT: 2.75% MIN
      NITRATE N2: 50 LBS/ACRE (50% WATER INSOLUBLE)
      PHOSPHOROUS: 100 LBS/ACRE
      POTASSIUM: 50 LBS/ACRE
   B. THE CONTRACTOR SHOULD BE AWARE OF THE POSSIBILITY, DEPENDING ON THE SITE CONDITIONS, THAT ALL TOPSOIL MAY HAVE TO BE PROVIDED FROM AN OFF-SITE SOURCE.
   C. TOPSOIL SHOULD BE HANDLED ONLY WHEN DRY ENOUGH TO WORK WITHOUT DAMAGING SOIL STRUCTURE.
   D. APPLY A UNIFORM 5 INCHES (UNSETTLED) OF TOPSOIL ON ALL DISTURBED AREAS. SOILS WITH A PH OF 4.0 OR LESS OR CONTAINING IRON SULFIDE SHALL BE COVERED WITH A MINIMUM DEPTH OF 12 INCHES OF SOIL HAVE A PH OF 5.0 OR MORE AND THE TOP 5 INCHES SHALL CONFORM TO THE TOPSOIL STANDARD AND SHALL BE LIMED ACCORDING TO THE SPECIFICATIONS.
   E. IF THE TOPSOIL BECOMES COMPACTED, THE SURFACE MUST BE SCARIFIED 6" TO 12" TO PROVIDE GOOD SEED TO SOIL BOND.
   F. APPLY LIMESTONE AND FERTILIZER ACCORDING TO SOIL TEST RECOMMENDATIONS SUCH AS THOSE OFFERED BY RUTGERS UNIVERSITY COOPERATIVE EXTENSION. IF SOIL TESTING IS NOT FEASIBLE, FERTILIZER (10-20-10) WITH 50% WATER INSOLUBLE NITROGEN SHOULD BE APPLIED AT THE TYPICAL RATE OF 500 LBS/ACRE OR 11 LBS/1,000 SQUARE FEET.
   G. APPLY LIMESTONE EQUIVALENT TO 50% CALCIUM PLUS MAGNESIUM OXIDES (PULVERIZED DOLOMITIC LIMESTONE IS PREFERRED FOR MOST SOILS SOUTH OF NEW BRUNSWICK - TRENTON FALL LINE) AS FOLLOWS:

SOIL TEXTURE	TONS/ACRE	LBS/1,000 SQ FT
CLAY, CLAY LOAM, HIGH ORGANIC	3	135
SANDY LOAM, LOAM, SILT LOAM	2	90
LOAMY SAND, SAND	1	45

   H. WORK LIME AND FERTILIZER INTO THE SOIL TO A DEPTH OF 4 INCHES. THE FINAL FARROWING OR DISC OPERATION SHOULD BE ON THE GENERAL CONTOUR. CONTINUE TILLAGE UNTIL A UNIFORM, FINE SEEDBED IS PREPARED.
   I. REMOVE FROM THE SURFACE ALL STONES 2 INCHES OR LARGER IN ANY DIMENSION, AND OTHER OBJECTIONABLE STONES OR DEBRIS SUCH AS WIRE, TREE ROTS, PIECES OF CONCRETE, CLODS, LUMPS, OR OTHER UNSUITABLE MATERIAL.
4. SEEDING
   A. SELECT A SEED MIXTURE APPROVED BY THE MERCER COUNTY SCD.
   B. APPLY SEED UNIFORMLY BY HAND, CYCLONES, DROP SEEDER, DRILL CULTIPACKER, OR HYDROSEEDER*. THE LATTER MAY BE JUSTIFIABLE FOR LARGE, STEEP AREAS WHERE CONVENTIONAL APPLICATIONS ARE NOT FEASIBLE. HYDROSEEDING SHALL BE A TWO STEP PROCESS: MULCH SHALL NOT BE MIXED WITH THE SEED; THE SEED MUST BE APPLIED FIRST TO ASSURE PROPER SEED TO SOIL CONTACT. THE HYDROMULCH IS THEN SPRAYED OVER THE SEEDING. FOR OPTIMUM RESULTS, THE SEED SHOULD BE INCORPORATED INTO THE SOIL TO A DEPTH F 1/4 TO 1/2 INCH DEPENDING UPON SPECIES.

* THE USE OF HYDRO-MULCH, AS OPPOSED TO STRAW, IS LIMITED TO OPTIMUM SEEDING DATES AS LISTED IN THE STANDARDS.

   C. AFTER SEEDING, THE SOIL SHOULD BE PACKED WITH A CORRUGATED ROLLER. WHEN PERFORMED ON THE CONTOUR, ROLLING WILL MINIMIZE SHEET EROSION AND MAXIMIZE WATER CONSERVATION.
5. MULCHING
   A. UNROTTED STRAW, HAY FREE OF SEEDS, OR SALT HAY IS REQUIRED ON ALL SEEDING AT A RATE OF 1.5 TO 2 TONS/ACRE, (70 TO 90 LBS/1000 SQUARE FEET), EXCEPT WHERE A CRIMPER IS USED INSTEAD OF A LIQUID MUCH-BINDER, THEN THE RATE OF APPLICATION IS 3 TONS PER ACRE.
   B. MULCH ANCHORING SHOULD BE ACCOMPLISHED IMMEDIATELY AFTER PLACEMENT TO MINIMIZE LOSS DUE TO WIND OR WATER. THIS MAY BE DONE ACCORDING TO THE FOLLOWING METHODS:
      1. WOOD-FIBER OR PAPER FIBER MULCH AT A RATE OF 1,500 LBS/ACRE APPLIED BY THE HYDROSEEDER. USE IS LIMITED TO ONLY THE OPTIMUM SEEDING SEASON.
      2. SYNTHETIC OR ORGANIC BINDERS
      3. PEG AND TWINE, MULCH NETTING, AND MECHANICAL CRIMPING
      4. CRIMPING REQUIRES A HIGHER MULCH RATE (3 TONS/ACRE)

      NOTE: 1) ONE BALE OF HAY WEIGHS 40-60 OBS DEPENDING ON HOW IT WAS BALED
      2) 1,500 GALLON TANK OF HYDROMULCH COVERS .5 ACRES
6. TEMPORARY SEEDING MIXES

   MIX : EARLY SPRING/LATE SUMMER TO EARLY FALL
   100% PERENNIAL RYEGRASS
   RATE: 100 LBS/ACRE

   MIX : LATE FALL
   100% CEREAL RYE
   RATE: 112 LBS/ACRE

   MIX : MID-SUMMER
   40% PEARL MILLET
   40% MILLET (GERMAN OR HUNGARIAN)
   20% WEEPING LOVEGRASS
   RATE: 100 LBS/ACRE
7. RECOMMENDED PERMANENT SEEDING MIXES

   OPTIMUM SEEDING DATES: MARCH 1 TO MAY 15 AND AUGUST 15 TO OCTOBER 15

   LAWNS - RATE 200 LBS/ACRE

   MERCER CO. SCD PREFERRED MIX FOR LAWNS AND DETENTION BASINS
   70% TURF TYPE TALL FESCUE *#
   20% PERENNIAL RYEGRASS
   10% KENTUCKY BLUEGRASS

   MIX: LAWNS - LOW MAINTENANCE DROUGHTY & HEAVY TRAFFIC
   80% TALL FESCUE TURF TYPE (LOW GROWING VARIETIES) *#

   MIX: SHADE
   65% HARD, CHEWINGS, OR CREEPING RED FESCUE *
   25% KENTUCKY BLUEGRASS

   MIX: LAWNS - QUALITY SUN AND SHADE
   20% PERENNIAL RYEGRASS
   30% CHEWING FESCUE
   35% CREEPING RED FESCUE
   15% KENTUCKY BLUEGRASS

   MIX: MOIST DETENTION BASIN BOTTOMS
   40% FLAT PEA (WITH PROPER INOCULANT)
   25% PERENNIAL RYEGRASS
   25% TALL FESCUE OR STRONG CREEPING RED FESCUE
   10% REDTOP

   + USE THE ABOVE BASIN MIX FOR INFREQUENT MOWING. FOR A REGULAR MOWING REGIME, SUBSTITUTE ROUGH BLUEGRASS AND/OR TALL FESCUE FOR THE FLAT PEA.

* INCLUDE AT LEAST THREE VARIETIES IN MIX

EXCLUDE K-31

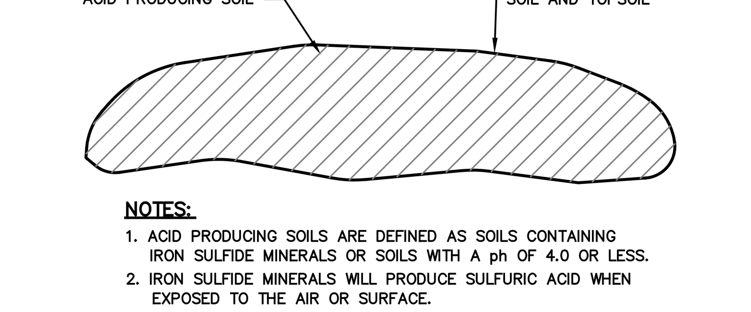

NOTES:

1. ACID PRODUCING SOILS ARE DEFINED AS SOILS CONTAINING IRON SULFIDE MINERALS OR SOILS WITH A ph OF 4.0 OR LESS.
2. IRON SULFIDE MINERALS WILL PRODUCE SULFURIC ACID WHEN EXPOSED TO THE AIR OR SURFACE.
3. SOIL USED TO COVER ACID PRODUCING SOILS SHALL HAVE A ph OF 5.0 OR MORE.

BURIAL OF ACID PRODUCING SOILS

NOT TO SCALE

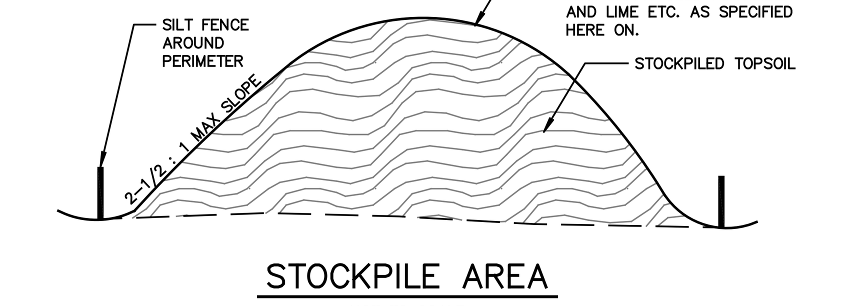

STOCKPILE AREA

NOT TO SCALE

STANDARD FOR STORM SEWER INLET PROTECTION

DEFINITION

A TEMPORARY BARRIER AND SETTLING FACILITY INSTALLED AT A STORM SEWER INLET.

PURPOSE

THE PURPOSE OF STORM SEWER INLET PROTECTION IS TO INTERCEPT AND RETAIN SEDIMENT, THUS PREVENTING THE ENTRANCE OF SEDIMENT INTO THE STORM SEWER SYSTEM.

CONDITIONS WHERE PRACTICE APPLIES

1. CONTRIBUTING DRAINAGE AREA IS 3 ACRES OR LESS.
2. A STORM SEWER OR THE OUTLET CHANNEL OF A STORM SEWER NEEDS PROTECTION FROM SEDIMENT.
3. TRAFFIC WILL NOT DESTROY OR CAUSE CONSTANT MAINTENANCE OF THE STORM SEWER INLET PROTECTION.
4. A TRAFFIC HAZARD WILL NOT BE CREATED.
5. A FLOODING PROBLEM WILL NOT BE CREATED.

WATER QUALITY ENHANCEMENT

THE PRIMARY BENEFIT TO WATER QUALITY IS REMOVAL OF SEDIMENT FROM STORMWATER RUNOFF PRIOR TO ENTERING THE STORM SEWER SYSTEM. AS AN ADDED BENEFIT, OTHER FLOATABLE DEBRIS, SUCH AS VEGETATIVE MATTER AND LITTER MAY ALSO BE FILTERED OUT OF THE RUNOFF.

DESIGN CRITERIA

THE FOLLOWING APPLIES TO ALL METHODS OF STORM SEWER INLET PROTECTION:

1. MUST SLOW THE STORM WATER, PROVIDE THE COARSE SEDIMENT PARTICLES A CHANCE TO SETTLE, AND PROVIDE AN AREA TO RETAIN THE PARTICLES THAT HAVE SETTLED.
2. IN ALL CASES, THE INLET PROTECTION SHOULD NOT COMPLETELY CLOSE OFF THE INLET.
3. THE PROTECTION DEVICE WILL BE DESIGNED TO CAPTURE OR FILTER RUNOFF FROM THE 1 YEAR, 24 HOUR STORM EVENT AND SHALL SAFELY CONVEY HIGHER FLOWS DIRECTLY INTO THE STORM SEWER SYSTEM.

OTHER METHODS THAT ACCOMPLISH THE PURPOSE OF STORM SEWER INLET PROTECTION MAY BE USED IF APPROVED BY THE SOIL CONSERVATION DISTRICT.

INSPECTIONS SHALL BE FREQUENT. MAINTENANCE, REPAIR, AND REPLACEMENT SHALL BE MADE PROMPTLY, AS NEEDED. THE BARRIER SHALL BE REMOVED WHEN THE AREA DRAINING TOWARD THE INLET HAS BEEN STABILIZED.

ADDITIONAL NOTES

1. CONTRACTOR SHALL BE RESPONSIBLE FOR MAINTAINING ALL PERMANENT SOIL EROSION AND SEDIMENT CONTROL MEASURES DURING CONSTRUCTION. THE PROPERTY OWNERS SHALL ASSUME THIS RESPONSIBILITY AFTER CONSTRUCTION IS COMPLETED AND CERTIFICATES OF OCCUPANCY ARE ISSUED.
2. THE SOIL EROSION INSPECTOR MAY REQUIRE ADDITIONAL SOIL EROSION MEASURES TO BE INSTALLED, AS DIRECTED BY THE DISTRICT INSPECTOR.
3. THE CONTRACTOR IS RESPONSIBLE FOR KEEPING THE ROADWAYS CLEAN AT ALL TIMES. ANY SEDIMENT SPILLED OR TRACKED ON THE ROADWAY WILL BE CLEANED UP IMMEDIATELY, OR AT MINIMUM, BY THE END OF EACH WORK DAY.
4. ALL SOIL EROSION AND SEDIMENT CONTROL PRACTICES ON INDIVIDUAL SITES SHALL APPLY TO ANY SUBSEQUENT OWNERS.
5. STEEP SLOPES TO RECEIVE A TEMPORARY SEEDING IN COMBINATION WITH STRAW MULCH OR SUITABLE EQUAL. (SEE ANCHORING NOTES & NOTE NO. 6 OF SOIL EROSION & SEDIMENT CONTROL NOTES.)

DUST CONTROL NOTE

DUST GENERATION SHALL BE CONTROLLED ON A CONSTANT BASIS BY WETTING THE SURFACE AND/OR APPLICATION OF CALCIUM CHLORIDE.

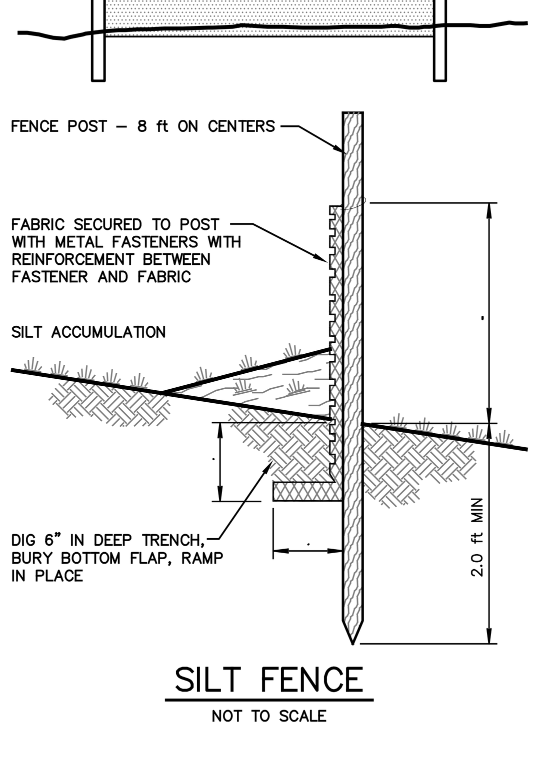

SILT FENCE

NOT TO SCALE

Clarke Caton Hintz
Architecture
Planning
Landscape Architecture
100 Barrack Street
Trenton, NJ 08608
tel: (609) 883-8383
fax: (609) 883 4044
www.clarkecatonhintz.com

Drawings Copyright ©2012 Clarke Caton Hintz, PC

OWNER:
THE COLLEGE OF NEW JERSEY
2000 PENNINGTON ROAD
EWING, NJ 08628
(609) 771-3315

SITE / CIVIL:
MATRIX NEW WORLD
442 STATE ROUTE 35, 2ND FLOOR
EATONTOWN, NJ 07724
(732) 588-2999

ELECTRICAL:
KELTER & GILLIGO
14 WASHINGTON RD.
PRINCETON JCT. NJ 08550
(609) 799-8336

SUBMISSIONS

NO.	DATE	DESCRIPTION
1	3/14/14	100% CD SUBMISSION

REVISIONS

DATE --/--/--

MATRIXNEWORLD
Enabling Progress
Matrix New World Engineering, Inc.
442 State Route 35, Second Floor
Eatontown, New Jersey 07724
WBE / DBE / SBE
NEW JERSEY CERTIFICATE OF AUTHORIZATION No. 24GA27962300
Tel: 732-588-2999
Fax: 973-240-1818
www.matrixneworld.com

MARK S. CIFELLI, P.E.
NEW JERSEY PROFESSIONAL ENGINEER
LICENSE NO. 24GE04926900

DATE

CAMPUS TOWN SIDEWALKS
THE COLLEGE OF NEW JERSEY
EWING, NJ

DATE:	1/30/14
SCALE:	AS SHOWN
DRAWN BY:	MSC
CHECKED BY:	PS

SHEET TITLE:
SOIL EROSION & SEDIMENT CONTROL DETAILS

DRAWING NO.:
C102

CCH PROJECT NO: 1234

Plotted: 3/12/2014 4:45 PM, By: Mark Cifelli
© MATRIXNEWORLD\M:\Matrix LDS\Jobs\Clarke Caton Hintz\LD13-145 - TCNJ Campus Town Sidewalks\Dwg\Plot Sheets\02-SESC Details.dwg\C102 SESC Details

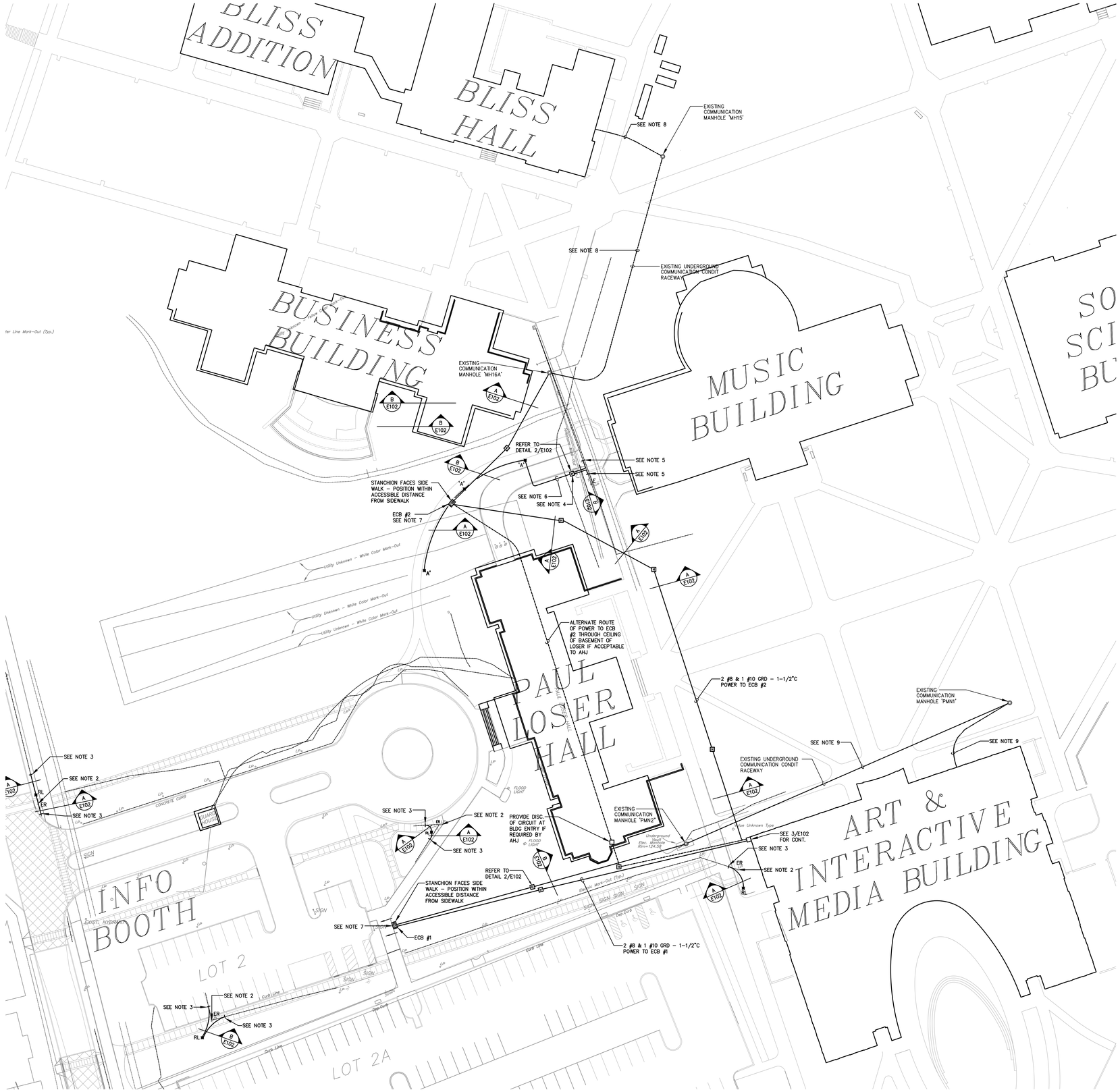

LIGHTING FIXTURE SCHEDULE

ID	LAMPS	MANUF.	CAT. NO.	MOUNTING	DESCRIPTION
A	(1) – 150W HID SPX 40	– –	SEE SITE CIVIL DRAWING	POLE	SEE SITE CIVIL DRAWING

SYMBOL LIST & ABBREVIATIONS

	LIGHT FIXTURE – SEE LIGHTING FIXTURE SCHEDULE
H	HANDHOLE ENCLOSURE – SEE DETAIL 2/E102
ECB	EMERGENCY CALL BOX, SEE DETAIL 2/E101
	208/120V PANELBOARD
	480/277V PANELBOARD
	EXISTING WIRE & CONDUIT, CONCEALED IN SLAB OR BELOW GRADE
	WIRE & CONDUIT, CONCEALED IN SLAB OR BELOW GRADE
	WIRE & CONDUIT, ALTERNATE ROUTING
E	EXISTING TO REMAIN
WP	WEATHERPROOF
ER	EXISTING TO BE RELOCATED, CAREFULLY REMOVE AND STORE FOR REINSTALLATION
RL	EXISTING RELOCATED, EXTEND EXISTING CIRCUIT TO NEW LOCATION AS REQUIRED

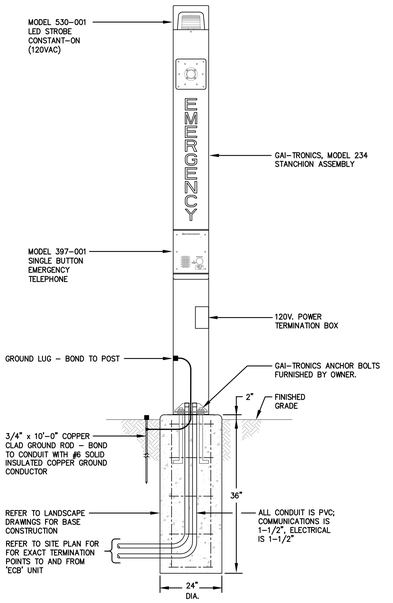

2 / E101 EMERGENCY CALL BOX INSTALLATION DETAIL
NOT TO SCALE

1 / E101 SITE PLAN – ELECTRICAL
SCALE 1" = 30'–0"

NOTES:

1. THE CONTRACTOR IS RESPONSIBLE FOR COORDINATING EXISTING UNDERGROUND UTILITIES. ALL UTILITIES SHALL BE MARKED OUT AS REQUIRED BY NJUA. CALL BEFORE YOU DIG.
2. LIGHTING STANDARD TO BE RELOCATED. STORE STANDARD ON SITE. CLEAN, RELAMP AND REPAIR ANY BROKEN PARTS PRIOR TO REINSTALLATION.
3. THE CONTRACTOR SHALL HAND DIG AND LOCATE EXISTING UNDERGROUND LIGHTING CIRCUIT. DISCONNECT POWER CIRCUITING SUPPLING STANDARD TO BE RELOCATE AND REMOVE WIRING BACK TO NEXT LIGHTING STANDARD. EXTEND CONDUITS TO NEW LIGHTING STANDARD AND PROVIDE POWER CIRCUITING CONNECTING NEW FIXTURE(S) TO THE EXISTING FIXTURES. MATCH EXISTING WIRING AND CONDUIT SIZE.
4. EXTERIOR LIGHTING CIRCUIT. EXTEND WIRING AND CONDUIT TO NEW SITE LIGHTING STANDARD.
5. THE CONTRACTOR SHALL HAND DIG AND LOCATE EXISTING UNDERGROUND LIGHTING CIRCUIT. DISCONNECT POWER CIRCUIT SUPPLY EXISTING STANDARDS TO REMAIN AND REMOVE WIRING BACK TO NEXT LIGHTING STANDARD. EXTEND CONDUIT TO NEW HANDHOLE. PROVIDE POWER CIRCUITING CONNECTING THE NEW LIGHTING STANDARDS TO THE EXISTING LIGHTING STANDARDS AS REQUIRED. CONTRACTOR TO TAKE FULL LOAD CURRENT READING AND PROVIDE TO OWNER AND ENGINEER PRIOR TO ROUGH–IN, TO CONFIRM OWNER'S REQUEST TO POWER THESE FIXTURES FROM THE EXISTING CIRCUIT.
6. PROVIDE NEW SITE LIGHTING STANDARD POWER CIRCUITING, CIRCUIT VIA 2 #8 & 1 #10 GRD – 1–1/2"C.
7. COORDINATE FINAL LOCATION OF THE EMERGENCY CALL BOX IN THE FIELD WITH THE ARCHITECT AND OWNER.
8. THE CONTRACTOR TO INSTALL COMMUNICATION CABLE AND TRACE LINE FROM EMERGENCY CALL BOX THROUGH NEW UNDERGROUND CONDUIT RACEWAY. EXTEND COMMUNICATION CABLE FROM EXISTING MANHOLE "MH16A" TO MANHOLE "MH15' AND INTO BLISS BUILDING 'IT' EQUIPMENT ROOM. COORDINATE FINAL CONNECTION WITH OWNER.
9. THE CONTRACTOR TO INSTALL COMMUNICATION CABLE AND TRACE LINE FROM EMERGENCY CALL BOX THROUGH NEW UNDERGROUND CONDUIT RACEWAY. EXTEND COMMUNICATION CABLE FROM EXISTING MANHOLE "PMN2" TO MANHOLE "PMN1' AND INTO 'ARTS' BUILDING 'IT' EQUIPMENT ROOM. COORDINATE FINAL CONNECTION WITH OWNER.
10. THE CONTRACTOR SHALL COORDINATE USE OF EXISTING CONDUIT RACEWAY WITH OWNER. INSTALLATION OF NEW COMMUNICATION CONDUIT SHALL BE MANUFACTURED, WITH MINIMUM LONG SWEEPING BENDS.
11. THE CONTRACTOR SHALL COORDINATE FINAL COMMUNICATION AND POWER CONDUITS WITH OWNER. CONDUIT SHALL BE INSTALLED WITH BELL–END FITTINGS AND WATER TIGHT SEALENT. CABLE SHALL BE RACKED AND SUPPORTED WITHIN MANHOLE.
12. THE CONTRACTOR SHALL PROTECT ALL EXISTING COMMUNICATION CABLE AND FACILITIES FROM DAMAGE. DOCUMENT ANY EXISTING DAMAGE VIA PHOTO AND REVIEW WITH PROJECT MANAGER. DAMAGES UNDER NEW CONSTRUCTION SHALL BE REPORTED AND REPAIRED BY "TCNJ' AT CONTRACTORS EXPENSE.

Clarke Caton Hintz
Architecture
Planning
Landscape Architecture
100 Barrack Street
Trenton, NJ 08608
tel: (609) 883-8030
fax: (609) 883-4044

Drawings Copyright ©2012 Clarke Caton Hintz, PC

OWNER:
THE COLLEGE OF NEW JERSEY
2000 PENNINGTON ROAD
EWING, NJ 08628
(609) 771–3315

SITE / CIVIL:
MATRIX NEW WORLD
442 STATE ROUTE 35, 2ND FLOOR
EATONTOWN, NJ 07724
(732) 588–2999

ELECTRICAL:
KELTER & GILLIGO
14 WASHINGTON RD.
PRINCETON JCT. NJ 08550
(609) 799–8336

SUBMISSIONS

NO.	DATE	DESCRIPTION

REVISIONS

2	3/14/14	100% CD SUBMISSION
1	2/21/14	ISSUE FOR 90% REVIEW

PROFESSIONAL ENGINEER
NJ LICENSE #38656
FRANK TINDALL, P.E
DATE

CAMPUS TOWN SIDEWALKS
THE COLLEGE OF NEW JERSEY
EWING, NJ

DATE:	2/21/2014
SCALE:	AS NOTED
DRAWN BY:	BH
CHECKED BY:	GG

SHEET TITLE:
SITE PLAN - ELECTRICAL

DRAWING NO.:
E-101

CCH PROJECT NO: 9013

March 20, 2014 5:05:47 p.m.
Drawing: E:\2603\2500\E1.DWG

ELECTRICAL SPECIFICATIONS

GENERAL REQUIREMENTS

This Section is coordinate with and complementary to the General Conditions and Special Requirements.

Drawings are diagrammatic. Sizes and locations of equipment are shown to scale where possible, but may be distorted for clarity on the Drawings. Final locations shall be as required or directed.

Light and power and system riser diagrams and schematic diagrams generally indicate equipment and connections to be used for various systems. System conduit and wiring shall be as required. Provide all work shown on diagrams whether or not it is duplicated on the plans.

SCOPE OF WORK

In general the work includes, but is not limited to the following:

1. All trenching, excavation and digging.
2. Raceways and Installation Components.
3. Wire and Cable.
4. Grounding.
5. Lighting Fixtures.
6. Control Equipment
7. Testing.
8. Seismic Restraints.
9. Waterproofing, and fireproof sealing, and cap flashing.
10. Cutting, drilling and boring associated with electrical work.
11. Prime painting, where required for electrical equipment and installation.
12. Provisions for temporary light and power.
13. Final connection of all equipment unless otherwise noted.

QUALITY ASSURANCE AND STANDARDS

The complete installation shall be in accordance with NJUCC (The State Building Code).

Contractor to be responsible for securing all necessary permits and obtaining all necessary approvals. Contractor shall complete all necessary forms .

SUBMITTALS

The Contractor shall submit shop drawings for all systems and components with such promptness as to cause no delay in his own work or that of another contractor.

EXAMINATION OF EXISTING CONDITIONS ON PREMISES

Before submitting his bid, this Contractor shall visit the site of the work and shall thoroughly familiarize himself with the existing conditions affecting the work. By the act of submitting a bid, the Contractor shall be deemed to have made such an examination, to have accepted such conditions, and to have made allowance therefore in preparing his bid. No additional compensation will be granted on account of extra work made necessary by the Contractor's failure to investigate such existing conditions. Verify all grades, elevations, dimensions, and clearances at the site.

INSPECTION AND TESTS

The entire wiring system must test free from short and open circuits. Every ground shall be tested for compliance with standards listed below.

PROTECTION, MAINTENANCE AND PRODUCT HANDLING OF ELECTRICAL EQUIPMENT

Electrical equipment shall be delivered and stored at the site, properly packed and crated until finally installed.

Provide effective protection against damage for all material and equipment during shipment and storage at the Project Site.

This Contractor shall be responsible for the maintenance of all installed equipment and systems until final acceptance by the Owner.

GUARANTEE

This Contractor shall guarantee in writing to the Owner that all work installed by him shall be free of defects in workmanship and materials and that all apparatus will develop the capacities and characteristics as indicated, and that, if during a period of one year from date of final approval of work by the Engineer, any defects in workmanship, materials or performance appear, he will remedy them without any cost to the Owner.

ACCESSIBILITY AND MEASUREMENTS

All work shall be installed so as to be readily accessible for operation, maintenance, and repair. Minor deviations from the plans may be made to accomplish this, subject to approval.

Before ordering any material or doing any work, the Contractor shall verify all measurements at the Building, and shall be responsible for the correctness of same as related to the work under this Contract.

TEMPORARY LIGHT AND POWER

Electric services for temporary light and power shall be obtained from generator or Loser Hall and extended as required. Coordinate with the Owner and provide all required material and work.

The Electrical Contractor shall furnish, install, and maintain the temporary lighting and power system for all Contractors. Provide temporary power for all construction trailers or as directed. The use of electricity shall be kept to a minimum.

Provide all wiring, supports, lamp sockets, receptacle sockets and any other materials, supplies or equipment necessary for temporary light and power system.

Ground fault protection required by OSHA.

Provide sufficient supplementary temporary lighting to permit proper execution of the work.

Keep the temporary lighting and power system operational commencing fifteen (15) minutes before the established starting time of that trade which starts work earliest in the morning and ending fifteen (15) minutes after the established quitting time of that trade which stops work latest in the evening.

IDENTIFICATION NAMEPLATES

Identify and mark all electrical equipment to meet OSHA standards and as specified herein.

Unless otherwise noted, nameplates shall be black laminate with white letters of uniform size consisting of reasonably large capital letters, 3/16 inch minimum.

RACEWAYS AND INSTALLATION COMPONENTS

The requirements of this Section apply to raceway work specified elsewhere in these specifications.

The work includes the providing of completely coordinated grounded raceway systems complete with boxes, fittings, flexible connections to vibrating equipment and accessories, as specified and as required for a complete system.

Raceways and fittings shall be manufactured by Triangle or Equivalent.

Rigid steel conduit shall be full weight steel pipe, hot dip galvanized inside and outside, threaded, minimum 3/4 inch.

Intermediate metal conduit (IMC) shall be intermediate steel pipe, hot dip galvanized, threaded, minimum 3/4 inch.

Liquid-tight flexible steel conduit (Seal-tite) shall be zinc coated, consist of flexible galvanized steel tubing over which is extruded a liquid-tight sheathing of polyvinyl chloride (PVC). Conduit shall be provided with a continuous copper bonding conductor would spirally between the convolutions.

Rigid steel and IMC conduit fittings shall be standard threaded couplings, locknuts, bushings, and elbows. Material shall be steel or malleable iron only.

Liquid-tight flexible metal conduit fittings shall incorporate a threaded grounding cone, a steel or plastic compression ring, and a gland for tightening. Connectors shall have insulated throats.

Polyvinyl chloride (PVC) conduit (use in or below concrete at grade only):
1. Shall be self-extinguishing, UL listed.
2. Where noted as concrete encased, it shall be thin wall, Type EB.
3. Direct burial shall be heavy wall, Schedule 40.
4. Shall be manufactured by Carlon, or Equivalent.

Individual conduit hangers, shall be designed for the purpose, and have pre-assembled closure bolt and nut, and provisions for receiving hanger rod.

Solid masonry and concrete anchors shall be a type approved for the purpose.

Provide and assume responsibility for locating and maintaining in proper position all sleeves required for the work.

Outlet boxes shall be manufactured by Raco or Equivalent.

Outlet boxes located outdoors and in damp locations shall be weatherproof.

Junction, splice and pull boxes shall be made of code gauge sheet steel with removable covers fastened with brass or stainless steel screws, except as noted, and will include insulated supports for cables. Box dimensions shall conform to N.E.C. requirements.

Provide junction, splice, pull boxes and/or handholes as required to facilitate pulling of conductors or in raceway runs that have more than three (3) 90-degree bends and/or over 150' in length.

For outdoor and damp locations, boxes shall be galvanized.

Wireways shall be as manufactured by Square D or Equivalent.

Wireways shall be square, brake-formed of code gauge steel, furnished in standard 10-foot sections with knockouts as required. Wireways shall be of the screw cover type and all necessary offset and elbow fittings. They shall have a gray enamel finish. Size shall be as required for proper cable fill.

Install raceway and installation components as indicated, in accordance with manufacturer's written instructions, applicable requirements of NEC and in accordance with the recognized industry practices, to ensure that products serve intended function.

Mechanically join all metal raceways, enclosures and junction boxes to assure continuity.

Conduits located underground for branch wiring shall be installed with a minimum of 30 in. top cover as shown on the drawings.

Rigid steel conduit shall be used for underground installation; in wet, damp or wash down locations; embedded in concrete or masonry or below concrete that is in contact with earth.

Intermediate metal conduit (IMC) may be used in place of rigid steel in dry locations only.

Liquid-tight flexible steel conduit shall be used in damp locations for final connections to motor terminal boxes, transformers, and other vibrating equipment in damp and dry locations.

Provide junction, splice, pull boxes and/or handlholes where required to facilitate installation of wiring, whether or not shown on Drawings. Size boxes according to code, and provide interior partitions, insulated supports, hot dip galvanized angle iron braces, screw-on one-piece or split covers, ground connectors, and other accessories as required.

All outdoor installations shall be weatherproof.

WIRE AND CABLE

The work includes providing wire and cable complete with all accessories in accordance with Drawings and Specifications and as required for a complete system. Wiring size referenced in this Section shall be AWG, except as noted

This project has been designed for copper conductors. Aluminum conductors are not acceptable and shall not be used. Cable shall be manufactured by Triangle or approved equal by Carol or Guardian Products.

No. 10 and smaller conductors shall be ASTM Standard, solid, copper; and, No. 8 and larger conductors shall be ASTM standard, stranded copper.

Minimum conductor size shall be No. 12 for lighting and power and No. 14 for control and alarm. Increase wire sizes as required for long runs to overcome voltage drop.

Communications and signal wiring shall conform to the recommendations of the manufacturer's communication and signal systems and shall be specified in respective Sections of these Specifications.

"THWN" or "XHHW" insulation shall be used for interior branch circuit and feeder wiring. Rating shall be 90oC in dry locations and 75oC in wet locations.

Green colored insulated wire shall be used for all grounding applications.

Phase wires shall be color-coded to match the existing conditions.

Neutral conductors shall be white for 120/208 volts and white with gray stripe for 277/480 volts.

Provide O-Z/Gedney Type "CSB" series seal fittings between the wire and conduit for all cable and wire entering the building from underground, including service cables.

Not more than 3 current carrying conductors shall be in one (1) conduit unless otherwise indicated. Provide one neutral conductor for each 3 phase 4 wire homerun to a panelboard unless otherwise noted.

Provide separate raceways for conductors of 120/208 and 277/480 volt systems, except 480 volt motor branch circuit wiring and related 120 volt control wiring may be installed in common raceway.

Make wire splices electrically and mechanically secure. Install small wire connectors so that no bare conductor is exposed. Tighten bolts on large conductor connectors so that conductor is deformed, but do not break strands of wire. Use compression tool with proper die for compression connectors in accordance with manufacturer's recommendations, so that conductors are deformed but not broken. Apply insulation over splice so that insulation thickness is at least 1-1/2 times that on conductor. Lap applied insulation at least 1" over conductor insulation so that no bare conductor is exposed.

In general, all feeders No. 8 and larger shall be continuous from point of origin to equipment being served. Splices shall only be used where necessary and with prior written approval of the Engineer.

Terminate conductors on terminal strips in equipment where terminal strips are used. Provide appropriate connectors, or hook conductors around terminal screws as required.

Provide encapsulated splice kits (3-M type 85 series or approved equal) for all splices in areas subject to moisture, including wet locations inside buildings and underground handholes, manholes, and buried junction boxes. Install splice kit in accordance with manufacturer's recommendations, and make splice waterproof. Apply sealing putty to surround each cable. Install mold body so that resin covers each cable sheath by a minimum of one inch.

All copper conductors No. 8 & larger shall be terminated, spliced, and tapped with color-keyed compression connectors, as manufactured by Thomas & Betts Co., Series 54000, Ideal Industries Series 87000, or approved equal. The manufacturer's recommended tooling shall be used. Mechanical type connectors shall not be used.

All copper conductors No. 10 AWG & smaller shall be terminated and spliced with Ideal Industries wing-nut wire connectors or approved equal compression connectors. The flame-retardant thermoplastic insulated type shall be used to isolate the terminal from other metal parts and equipment.t

Use insulating boots supplied for compression connectors and rap (3) 1/2 lap layers of "scotch" #33 electrical tape around connectors.

GROUNDING

Ground rods shall be copper clad steel not less than 3/4" diameter and 10 foot long. Provide at least two per location separated by at least 24". Ground clamps shall be bronze, solderless type with bronze screws suitable for receiving required or noted conductors.

Grounding equipment shall be manufactured by o-z/gendney or Equivalent.

The complete electrical installation shall be permanently and effectively grounded in accordance with all code requirements, whether or not such connections are specifically shown or specified. Measured resistance to ground shall be 5 ohms, maximum. All parts of the electrical installation shall be grounded.

Ground conductors shall be sized in accordance with the National Electrical Code. Ground conductors shall be continuous without splices.

Ground rods shall be vertically driven with tops below grade. Where required to obtain the specified ground resistance, install multiple rods.

Where ground connections will be permanently concealed, make the connections by the exothermic process to form solid metal joints. Make accessible ground connections with mechanical pressure type ground connections.

LIGHTING FIXTURES

DESCRIPTION OF WORK

The work includes the providing of all labor, materials, equipment, accessories, services and tests necessary to complete and make ready for operation by the Owner all lighting fixtures in accordance with Drawings and Specifications.

QUALITY ASSURANCE

"Manufacturers" – Firms regularly engaged in manufacture of lighting fixtures whose products have been in satisfactory use in similar service for not less than 5 years.

Lighting fixtures shall be listed and labeled by Underwriters Laboratories, and shall comply with standards of NEMA, ANSI, and National Electrical Code (NFPA 70) for construction and installation.

Provide lighting fixtures whose performance under specified conditions is certified by the manufacturer.

Provide lighting fixtures, ballasts, and lamps produced by manufacturers listed in this section or noted on the Drawings.

Furnish, install and connect exterior lighting fixtures as indicated on the Drawings, and as required for a complete and satisfactorily operating system.

SUBMITTALS

Include all required lighting fixture submittals under common cover. Catalog cuts without required details will not be acceptable. Shop drawings for each lighting fixture types shall include:

1. Details of construction and finishes.
2. Drawings to scale.
3. Electrical ratings, mounting, lenses, and lamps.
4. Photometric data for all site lighting and fixtures.

PRODUCTS

Refer to Lighting Fixture Schedule on Drawings for specific types and manufacturers of fixtures. The lighting fixtures shall be by the manufacturer specified for each type of fixture or approved equivalent. Fixtures shall be suitable for application and environment where they are being installed. Fixtures shall have proper label, i.e. "Wet Locations", "Dust Tight", etc., whether or not specifically contained in the specified catalog number or fixture description.

Where catalog numbers are listed, they shall be considered only as a guide. Contractor is cautioned to take care that where fixtures are ordered by catalog numbers these fixtures must incorporate all the general and particular requirements mentioned in the specification, even though it may be necessary to modify the manufacturer's standard fixture corresponding to the designated type or catalog number.

Fixtures shall be completely factory-assembled and wired and shall be equipped with all necessary sockets, ballasts, wiring, shielding, reflectors, channels, lenses, etc., and delivered to job ready for installation. All metal parts shall be welded at joints, ground smooth, and free from light leaks. Sockets shall be of reinforced heat-resistant plastic, rated 600 watts at 250 volts, to prevent the sockets from spreading. Fixture bodies shall be sheet steel or aluminum with minimum thickness of 20 gauge or as indicated in Lighting Fixture Schedule, unless heavier gauge is required by the National Electrical Code. All fixtures shall bear U.L. Label for the environment where they are to be installed.

Lamps shall be manufactured by General Electric, or Equivalent. A complete set of new lamps shall be installed in each fixture.

All methods of construction and details of workmanship, where not specifically described or shown on the Drawings, shall be satisfactory to the Engineer and shall be subject to his approval.

INSTALLATION

Install lighting fixtures where shown, in accordance with N.E.C., manufacturer's instructions, and with recognized industry practices. Coordinate with other work as necessary. Comply with NEMA standards and requirements of the NEC pertaining to installation of lighting fixtures and with applicable portions of NECA's "Standard of Installation". Coordinate with other trades and provide fixtures with the proper support.

Mount fixtures in accordance with manufacturer's installation details and applicable codes. Provide all required accessories. For site lighting fixtures:

1. Erect site lights to form a complete assembly of luminaire, pole and concrete base.
2. Provide reinforced concrete foundation as indicated on Drawings. Provide anchor bolts as required by equipment supplier. Pour foundation to finished height and allow to set. Provide leveling shims below base plate of pole, set pole plumb, and tighten nuts. Face access door away from traffic. Use stainless steel or hot-dip galvanized hardware.
3. Form drain trough in top of base to permit water to drain out from under base. Form a 1" x 1" chamfer around perimeter of base. Provide smooth rubbed finish on exposed portion of base, and extend finish 6" below grade. Provide premolded expansion joint between foundation and adjacent paving. Provide ground rod adjacent to pole base.
4. Provide rigid steel conduit elbow in concrete base to lead wiring into pole base. Splice wires in base of pole and train leads up pole to luminaire. Provide encapsulated splice kits for all wiring in buried handholes, manholes, and underground junction boxes.
5. Provide a fuse holder in each phase conductor feeding outdoor pole mounted lighting fixtures. Fuse holders shall be located in all pole bases (in handholes or junction boxes opposite pole for poles with shoe bases). Fuse holders shall be used to isolate overhead fixtures from the total circuit if trouble should occur.

At conclusion of the work, deliver to Owner a written certificate guaranteeing all Fixture components for a full two years after job acceptance date. Guarantee shall also cover the cost of replacing the defective ballast and installing new ballast, as well as the purchase cost

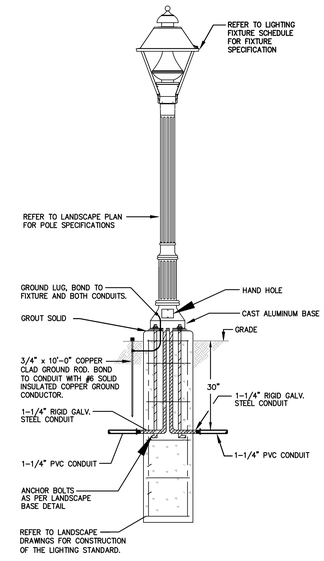

1 / E102 SITE LIGHTING STANDARD INSTALLATION DETAIL

NOT TO SCALE

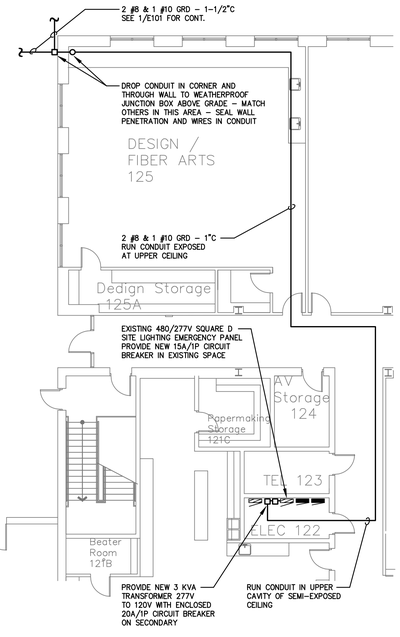

3 / E102 PARTIAL FLOOR PLAN – ARTS BUILDING

SCALE 1/8" = 1'-0"

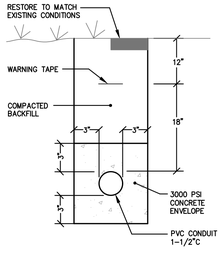

A / E102 TYPICAL DUCTBANK DETAIL

NOT TO SCALE

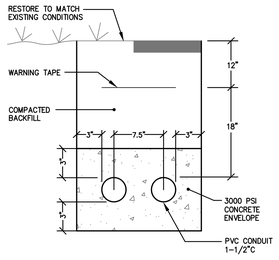

B / E102 DUCTBANK DETAIL

NOT TO SCALE

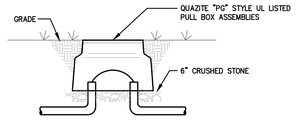

2 / E102 HANDHOLE DETAIL

NOT TO SCALE

NOTES:

1. COORDINATE EXACT LOCATION OF ALL HANDHOLES IN THE FIELD. PROVIDE ADDITIONAL HANDHOLES AS REQUIRED. NO HANDHOLES SHALL BE LOCATED WITHIN ROADWAY OR PARKING AREAS.
2. ALL HANDHOLES SHALL BE UL LISTED AND SIZED PER NEC 2011.

Clarke Caton Hintz
Architecture
Planning
Landscape Architecture
100 Barrack Street
Trenton, NJ 08608
tel: (609) 883-8030
fax: (609) 883-4044

Drawings Copyright ©2012 Clarke Caton Hintz, PC

OWNER:
THE COLLEGE OF NEW JERSEY
2000 PENNINGTON ROAD
EWING, NJ 08628
(609) 771-3315

SITE / CIVIL:
MATRIX NEW WORLD
442 STATE ROUTE 35, 2ND FLOOR
EATONTOWN, NJ 07724
(732) 588-2999

ELECTRICAL:
KELTER & GILLIGO
14 WASHINGTON RD.
PRINCETON JCT. NJ 08550
(609) 799-8336

SUBMISSIONS

NO.	DATE	DESCRIPTION

REVISIONS

2	3/14/14	100% CD SUBMISSION
1	2/21/14	ISSUE FOR 90% REVIEW

PROFESSIONAL ENGINEER
NJ LICENSE 24856
FRANK TINDALL, P.E.
DATE

CAMPUS TOWN SIDEWALKS
THE COLLEGE OF NEW JERSEY
EWING, NJ

DATE:	2/21/2014
SCALE:	AS NOTED
DRAWN BY:	BH
CHECKED BY:	GG

SHEET TITLE:
PLANS, DETAILS & SPECIFICATIONS - ELECTRICAL

DRAWING NO.:
E-102

CCH PROJECT NO: 9013

March 20, 2014 5:05:47 p.m.
Drawing: E:\2503\2503E1.DWG